SHOP STANDARDS - Check ALL Required:

Project:_____ For: ☐ Approval OR ☐ Record

Send _____ Copies or ☐ Email To:_____

☐ Duct (Typical Supply or Return)

FITTINGS & OTHER CONSTRUCTION

- ☐ Adhesive
- ☐ Corner Closures
- ☐ Access Doors
- ☐ Connections - Branch
- ☐ Connections - Breakaway
- ☐ Divided Flow Branches
- ☐ Ceiling Diffuser Branch Ducts
- ☐ Duct Hanger Sizes
- ☐ Duct Liner Installation
  (Choose Type: ☐½" 2lb ☐1" 3lb. ☐ 1" 1½ lb ☐ 2" 1 ½ lb.)
- ☐ Duct Rigidity - Cross Broken & Beaded Duct
- ☐ Duct Sealant – Ductmate Everseal
  (or choose other type: ☐DP1010 ☐Ductmate ProSeal ☐SuperSeal ☐Aluma Grip)
- ☐ Duct Wrap
  (Choose Type: ☐SoftR (R4 or R6) ☐High Temperature)
- ☐ Elbows - Rectangular
- ☐ Elbows - Round
- ☐ Fire Damper Mounting
- ☐ Firestopping
- ☐ Flex Duct – Insulated
  (Choose Type: ☐ATCO #70 ☐MKC or ☐ by R Value_____)
- ☐ Flex Duct - Non Insulated Final Connections (Exhaust & Return)
- ☐ Gasket Tape (Butyl & Neoprene)
- ☐ Hanger Attachments - Lower
- ☐ Hanger Attachments - Upper
- ☐ Isolation Devices
- ☐ Joints & Seams - Rectangular Duct
- ☐ Joints & Seams - Round Duct
- ☐ Offsets & Transitions
- ☐ Roof Curb – ACME Self Flashing (Qty & Size:_____)
- ☐ Roof Rails & Portals (Qty & Size: Rails_____Portals_____)
- ☐ Vanes & Vane Runners
- ☐ Volume Dampers – Single Blade
- ☐ Volume Dampers – Multiple Blade

Environmental Air, Inc.
1100 McCartney Street • Pittsburgh, PA 15220
PH: (412) 922-8988 • FX: (412) 922-2857

SHOP STANDARDS

Project: _____

Location: _____

STANDARD ACCESS DOORS

APPLICATION

Ruskin access doors offer quick, easy and economical installation wherever duct access is needed. Manual locks assure tight door closure and the continuous piano-type hinge models give smooth operation. The ADCW and ADHW models feature a "see through" panel that permits visual duct inspection without door removal.

STANDARD CONSTRUCTION

FRAME
22 gage (.8) galvanized steel with seal.

DOOR
24 gage (.7) galvanized steel.
ADC24 – Removable, double skin.

HINGE (ADH Models Only)
Continuous piano type.

LOCKS
ADC Models – Doors 16" (406) and under have two locks, doors over 16" (406) have four locks.

MAXIMUM STATIC PRESSURE
Double skin access doors have been tested to 6" w.g.
Leakage increases as system pressure increases.

SEALS
Foam gasket.

INSULATION
1" (25) fiberglass.

MINIMUM SIZE
6"w x 6"h (152 x 152).

MAXIMUM SIZE
24"w x 24"h (610 x 610).

INSTALLATION
Cut hole 11/8" (28) smaller than door size.

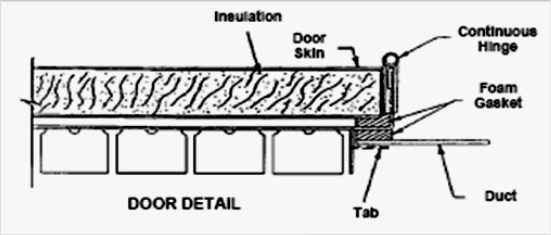

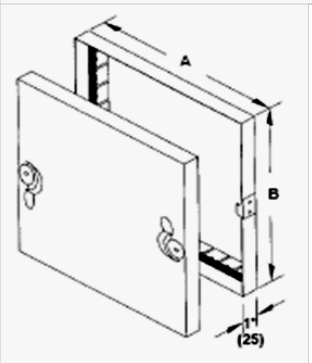

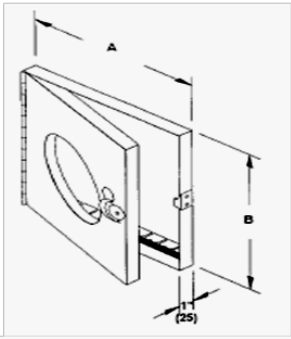

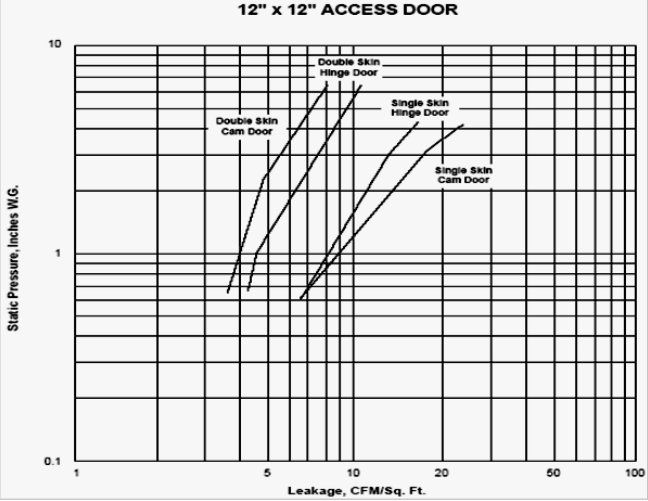

VARIATIONS

- Additional cam locks
- Wire reinforced glass window
- 20 gage (.9) door panels
- Ventlock 100 latches
- Stainless steel construction
- Bronze hinge pins
- Brass cams
- Security chain
- Intermediate sizes between 6" x 6" (152 x 152) and 24" x 24" (610 x 610)

NOTES

1. Dimensions shown in parenthesis ( ) indicate millimeters.
2. Access doors furnished actual size.
3. For doors larger than 24" x 24" (610 x 610) see GPAD.

Environmental Air, Inc. - Shop Standards	
Date:	
Project:	

ACCESS DOORS

PROPERTIES

COLOR:
White (Wet), Translucent (Dry)

APPLICATION CONSISTENCY:
Smooth, Excellent Spray and Extrusion

AVERAGE WEIGHT / U.S. GALLON (ASTM D 1875):
8.8 lbs. (1.05 kg/l)

AVERAGE NON-VOLATILE (ASTM D 1644):
38% by volume (40% by weight)

COVERAGE RANGE:
400-500 ft2/gal (9.2-12.3 m2/l)

DRYING TIME (75°F (24°) 50% RH):
Set to Touch: 15 minutes
Dry Through: 3 hours

BONDING TIME:
0-10 minutes

SERVICE TEMPERATURE LIMITS (FSTM 70):
-20°F to 200°F (-29°C to 93°C)

TIME TO FIBER TEAR:
30-60 minutes, 1" Duct Liner

BOND STRENGTH TO GALVANIZED STEEL:
40°F (4°C) 20 Hours 2.5±0.5 pli

WET FLAMMABILITY (ASTM D 3278):
No flash to boiling, >200°F (93°C)

SURFACE BURNING CHARACTERISTICS (ASTM E 84):
Flame Spread: 5
Smoke Developed: 0
Coverage Rate: 400 ft2/gal (9.8 m2/l)
Applied to 1/4 inch (6.4mm) inorganic reinforced cement board. The flame spread may vary at different product thicknesses and/or when applied over other surfaces.

™ Trademark of Specialty Construction Brands, Inc.

Visit us on the web at www.fosterproducts.com

FOSTER LINE-FAS™ ADHESIVE

85-00

FOSTER LINE-FAS ADHESIVE is an economical pure polymer water-base duct liner adhesive with excellent fire resistance, tack development, and bond strength.

LINE-FAS ADHESIVE is intended for high volume spray and coil line operations. It runs smoothly on spray head, extrusion, or roll coater equipment. Its fine atomization makes it ideal for manual spray applications as well.

LINE-FAS ADHESIVE is solvent free and features an exceptionally mild odor with very low VOC level. It has a mild/negligible odor when wet and no odor when dry.

LINE-FAS ADHESIVE meets ASTM C-916 Type II adhesive requirements. It is intended for bonding fiberglass and mineral wool duct liner insulation to galvanized steel.

LINE-FAS ADHESIVE meets NFPA 90A and 90B 25/50 requirements.

LINE-FAS ADHESIVE meets requirements for LEED IEQ 4.1 Low-Emitting Materials, Adhesives and Sealants. VOC: 5 g/l, less water and exempt solvents.

LINE-FAS ADHESIVE is produced under the classification and follow-up service of Underwriter's Laboratories, Inc.

ASTM-C-916 PERFORMANCE
7.1 Bond Strength @ R.T. 3.0±1.0 pli
7.2 Bond Strength @ 95% RH 2.5±0.5 pli
7.3 Bond Strength @ 158°F 2.5±0.5 pli
7.4 Bond Retention, 90 day, 158°F-Pass, 100% Bond Fiber Failure

LIMITATIONS
Store and apply between 40°F (4°C) and 100°F (38°), protect from freezing until dry.

Not suggested for sealing vapor barrier jackets.

Overhead applications may require mechanical fasteners.

MATERIAL PREPARATION
DO NOT THIN. Apply only to clean, dry, oil free surfaces. Keep container closed when not in use. Before using for the first time, existing systems must be completely cleaned and free of the old adhesive and solvents. Corrosion resistant pumps and fittings are suggested.

APPLICATION
Apply LINE-FAS Adhesive to the metal surface uniformly at 400-500 ft2/gal (9.8-12.3 m2/l). While still wet, press the insulation into place, making sure that complete contact is made with applied adhesive.

SPRAY
The following equipment combinations are suggested:

	MODEL SPRAYGUN	FLUID NOZZLE	AIR CAP	FLUID PRESSURE	ATOMIZATION PRESSURE
Binks	200155	63	66SD	25psi	60psi
DeVilbiss	JGA	FX	770	25psi	60psi

ADHESIVES
SURFACE BURNING CHARACTERISTICS
Applied to Inorganic Reinforced Cement Board
Flame Spread: 5
Smoke Developed: 0
Tested as applied at a coverage rate of 400 ft^2/gal
312U

Airless, Electric, 30:1 or equivalent. Tip .019 - .025. Average viscosity range: 3,000 to 5,000 cps.
All adhesive systems should have a fluid filter, of at least a 50-mesh size, at the pump, inline, or at the gun.

ROLLCOATERS, COIL LINES, AND DUCT LINER MACHINES
Use clean equipment suitable for water-base adhesives. Adjust equipment to apply the smallest amount of adhesive that will produce satisfactory bonds. On rollcoaters, protect the adhesive from exposure to the air as much as possible. Cover the trough and roller with plastic sheeting when not in use. In dry conditions, occasionally mist the surface of the adhesive with clean water to prevent skinning.

Environmental Air, Inc. - Shop Standards	
Date:	
Project:	

ADHESIVE

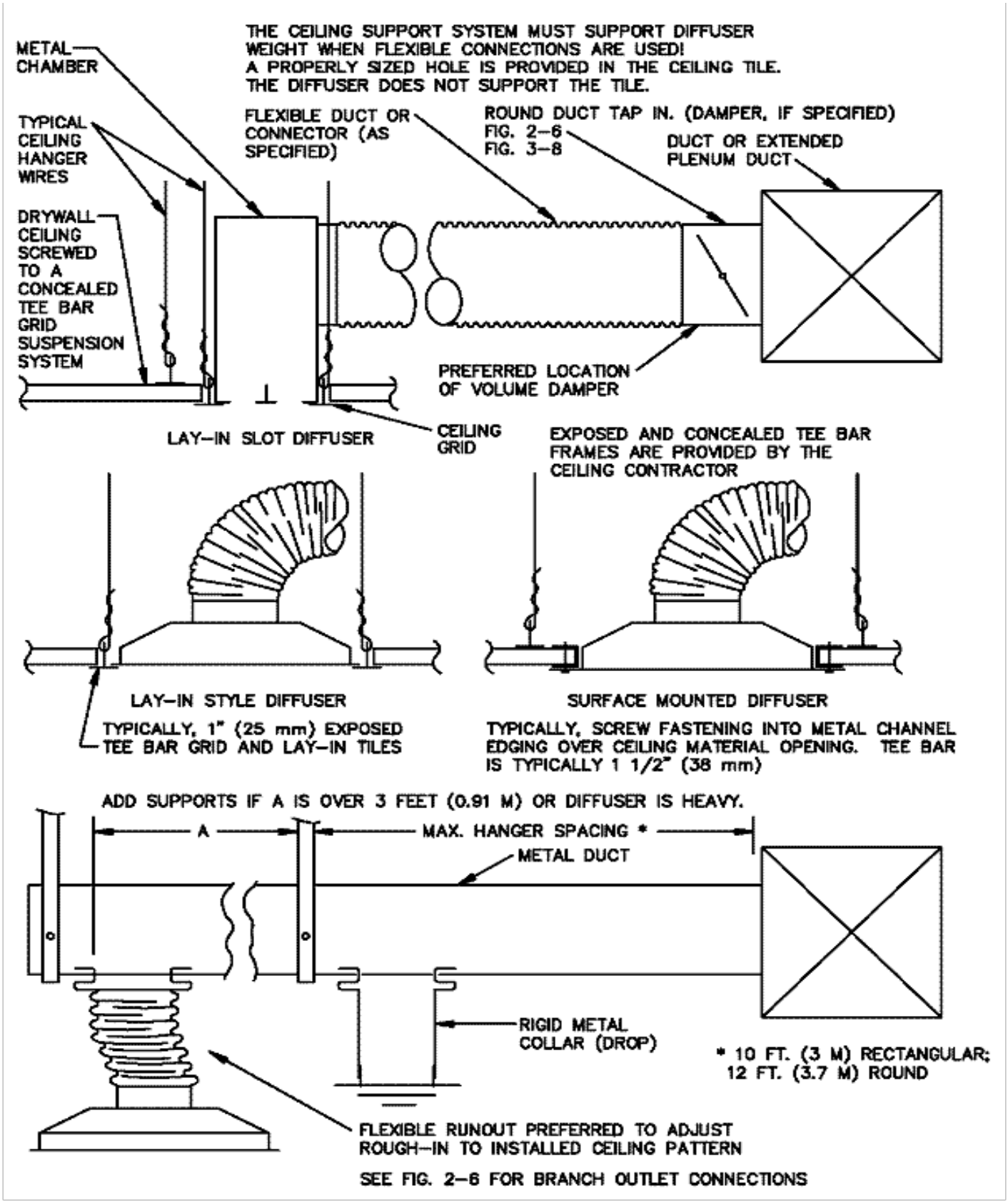

Environmental Air, Inc. - Shop Standards	
Date:	
Project:	

CEILING DIFFUSER BRANCH DUCTS

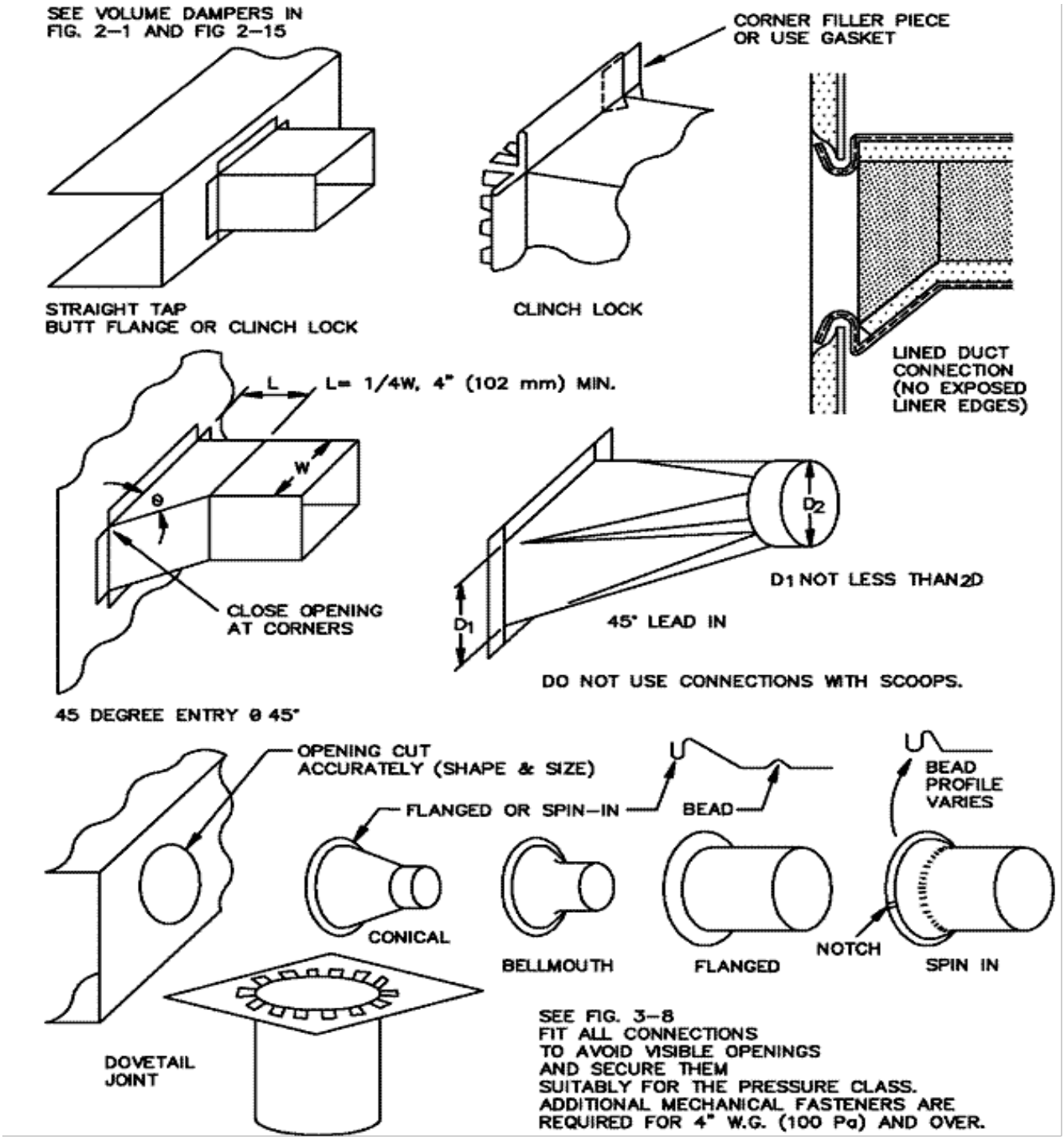

Environmental Air, Inc. - Shop Standards	
Date:	
Project:	

CONNECTIONS

Branch

UL Accepted
Duct-Sleeve Connections
(Breakaway Connections)

1. Duct-sleeve connections listed in UL 555, Fourth Edition, "Standard For Fire Dampers".

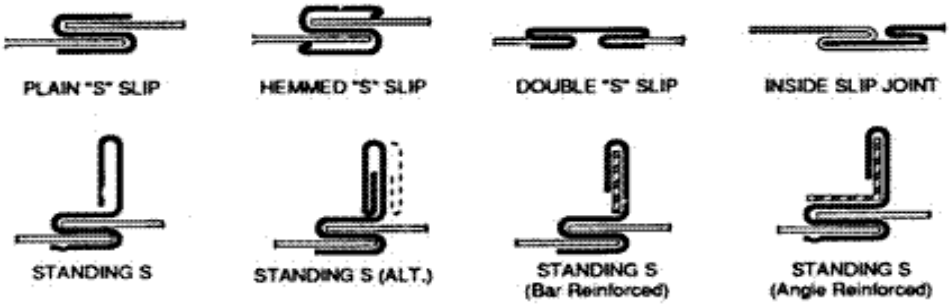

2. Additional duct-sleeve connections which were tested by SMACNA and witnessed by UL in 1991. The connections performed within the requirements of the UL test criteria. See note 1.

(a) Joints using connections shown in 1. above with a maximum of two #10 sheet metal screws on each side and on the bottom located in the center of the slip pocket and penetrating both sides of the slip pocket. Note: UL tested duct sealant may be used.

(b) Joints using connectors of the types shown in 1. above on the top and the bottom and using flat drive slips not exceeding 20" duct height on the sides (see sketch below). Note: Duct sealant may be used.

(c) Joints where round or oval spiral ducts attach to round or oval collars which are part of the damper sleeve as shown below. #10 sheet metal screws are spaced equally around the circumference of the duct per the following:

- Duct diameters 22" and smaller — 3 screws.
- Duct diameters over 22" to and including 36" — 5 screws.

Notes:

(1) For flat oval ducts, the diameter shall be considered the largest (major) dimension of the duct.

(2) Duct sealant may be used.

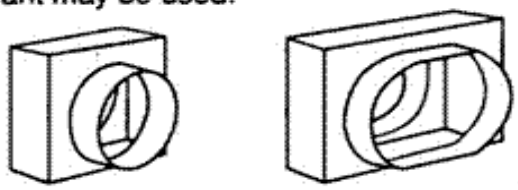

DAMPER/SLEEVE ASSEMBLIES WITH COLLARS FOR ROUND AND FLAT OVAL DUCTS

Environmental Air, Inc. - Shop Standards	
Date:	
Project:	

CONNECTIONS

Breakaway

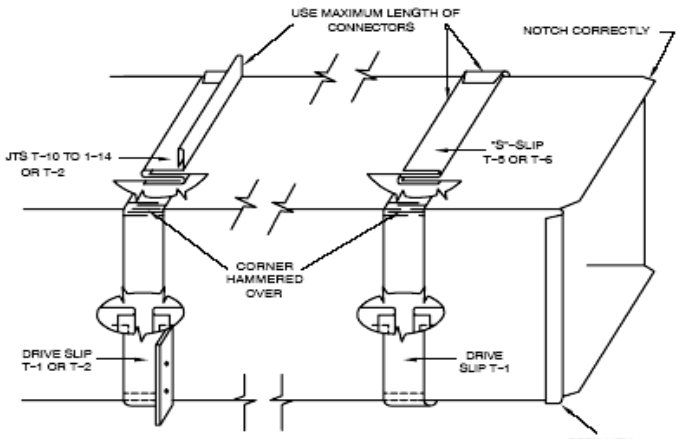

FIGURE A

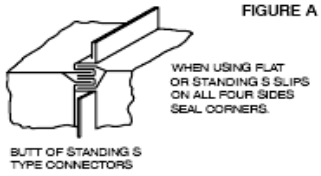

FIGURE B

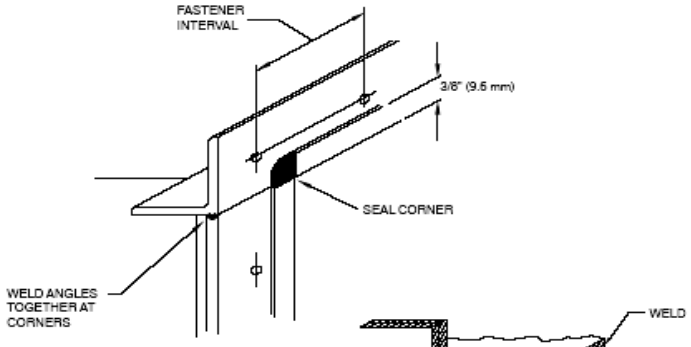

CORNER DETAIL
COMPANION ANGLE T-22

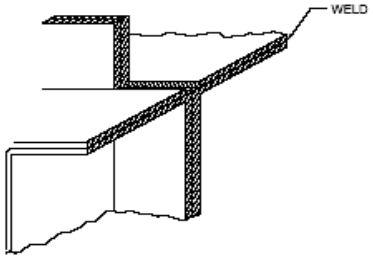

T-21 ALTERNATE WITH EDGE WELDED LONGITUDINAL SEAM

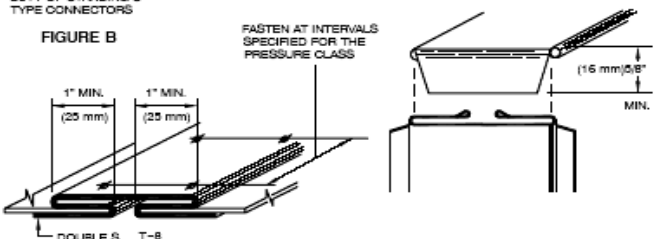

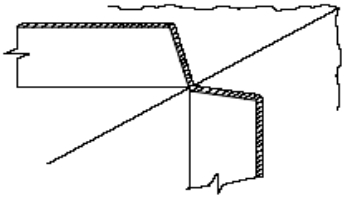

T-21 CONTINUOUS EDGE WELD OR BRAZE

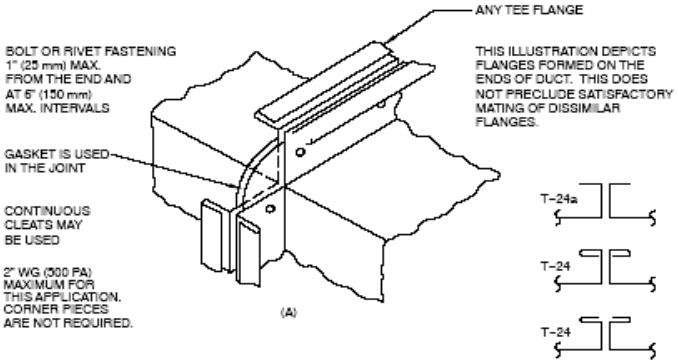

(A)

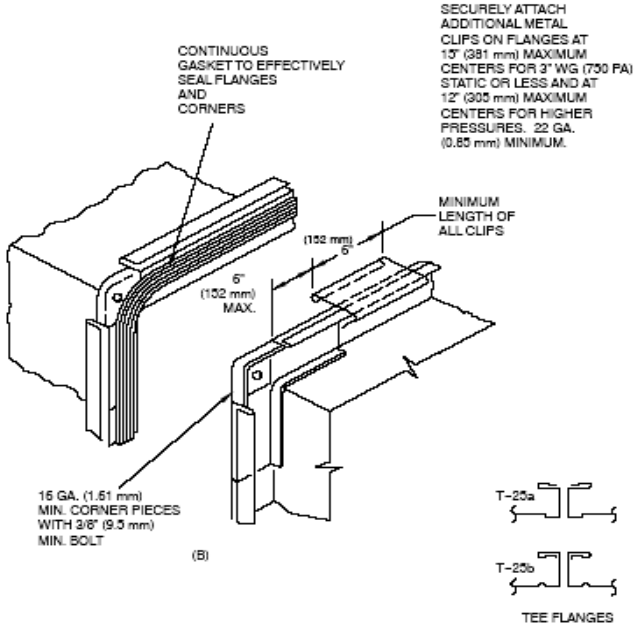

(B)

TEE FLANGES

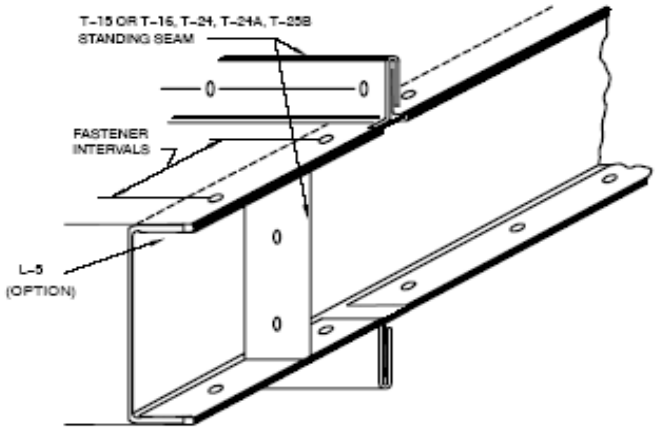

SCREWS MAY BE USED IN LIEU OF METAL CLIPS. INSTALL 1" (25MM) MAX. FROM END OF CORNER PIECE AND AT 6" (152 MM) MAX. INTERVALS.

EQUIVALENT FIXATION OF JOINTS MAY BE USED. CONTINUOUS CLEATS MAY BE USED.

Environmental Air, Inc. - Shop Standards	
Date:	
Project:	

CORNER CLOSURES

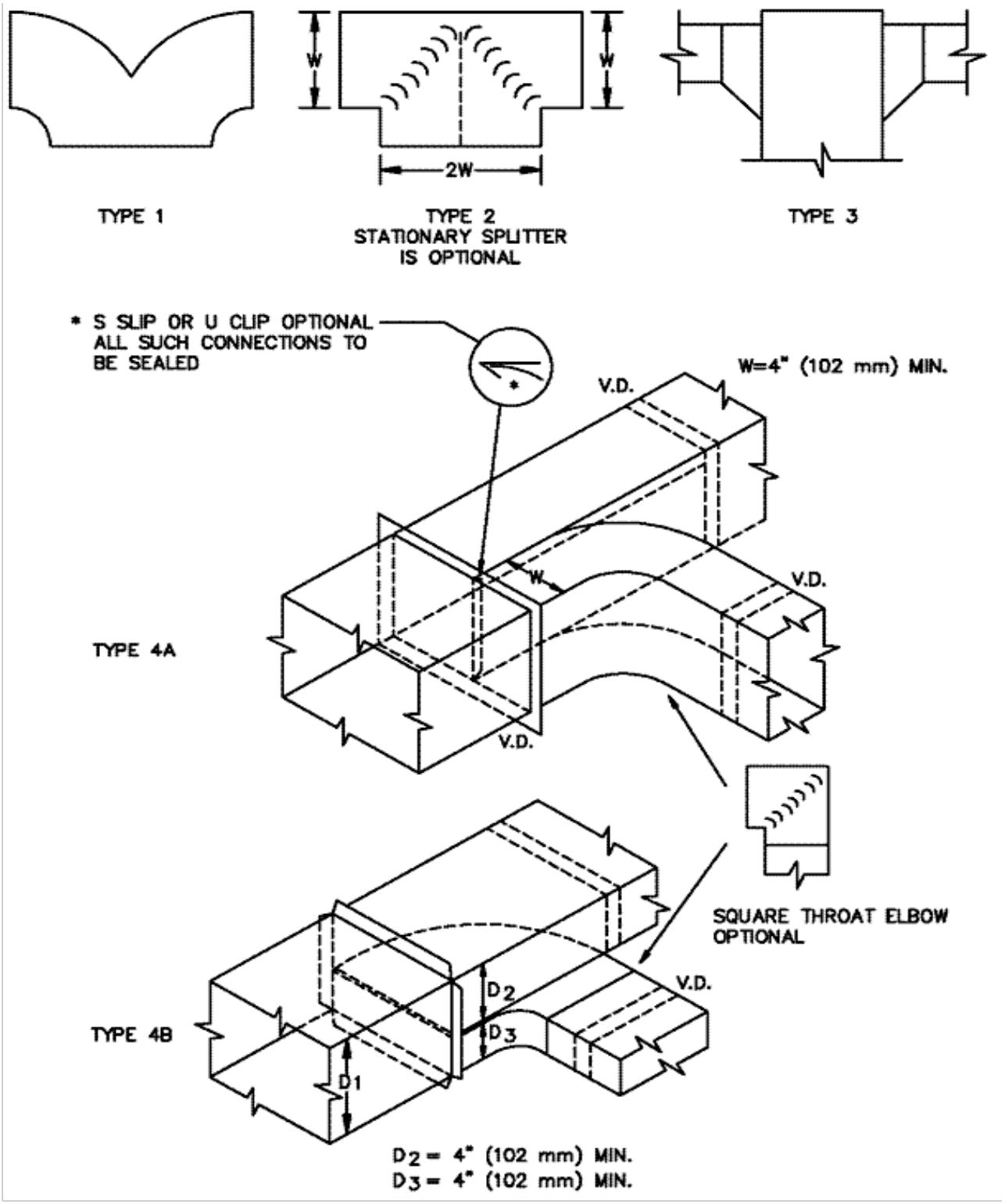

Environmental Air, Inc. - Shop Standards	
Date:	
Project:	

DIVIDED FLOW BRANCHES

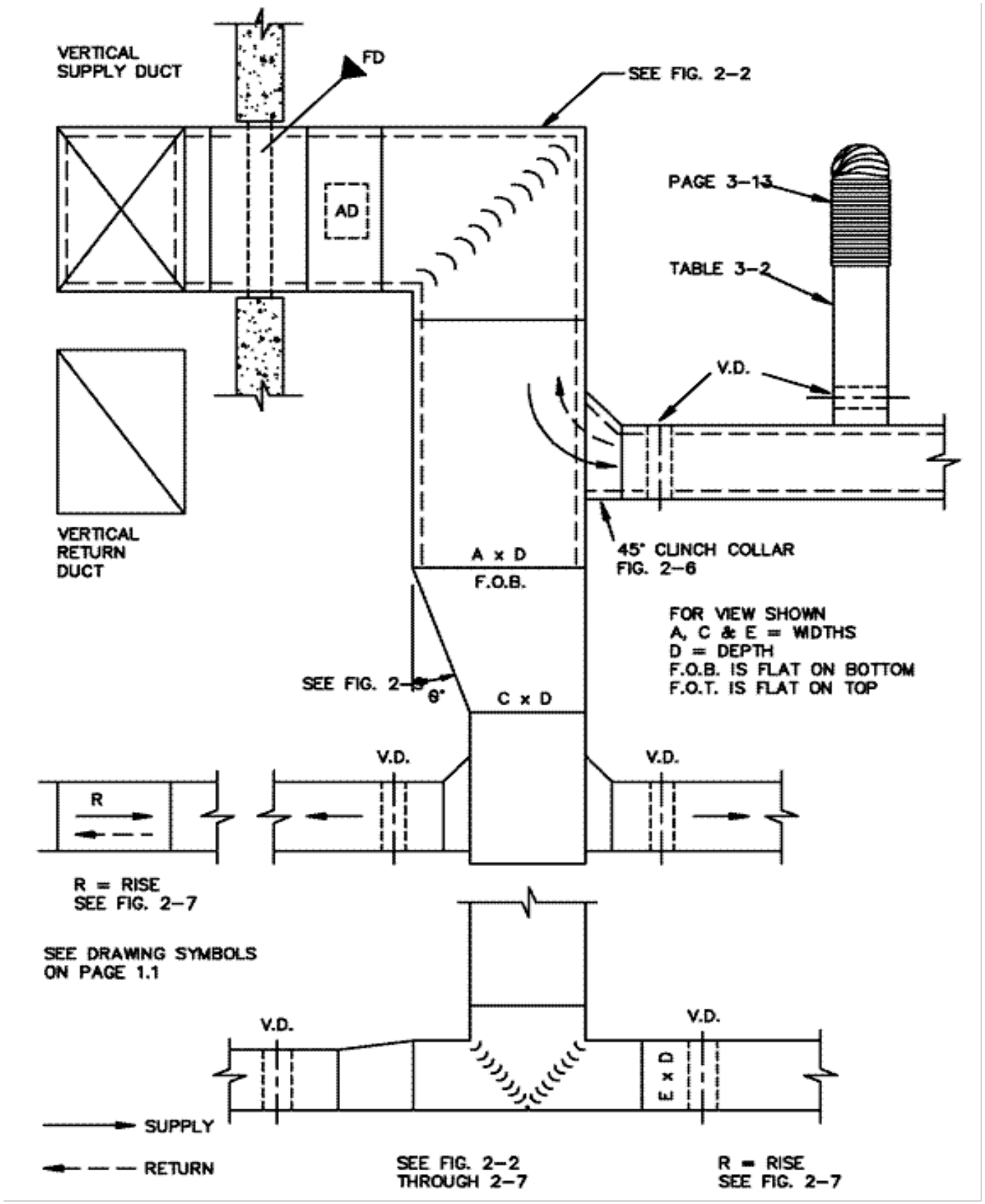

Environmental Air, Inc. - Shop Standards	
Date:	
Project:	

DUCT

Typical Supply or Return

TABLE 4-1
RECTANGULAR DUCT HANGERS
MINIMUM SIZE

MAXIMUM HALF OF DUCT PERIMETER	Pair at 10 ft Spacing		Pair at 8 ft Spacing		Pair at 5 ft Spacing		Pair at 4 ft Spacing	
	STRAP	WIRE/ ROD	STRAP	WIRE/ ROD	STRAP	WIRE/ ROD	STRAP	WIRE/ ROD
P/2 = 30"	1" x 22 ga.	10 ga. (.135")	1" x 22 ga.	10 ga. (.135")	1" x 22 ga.	12 ga. (.106")	1" x 22 ga.	12 ga. (.106")
P/2 = 72"	1" x 18 ga.	3/8"	1" x 20 ga.	1/4"	1" x 22 ga.	1/4"	1" x 22 ga.	1/4"
P/2 = 96"	1" x 16 ga.	3/8"	1" x 18 ga.	3/8"	1" x 20 ga.	3/8"	1" x 22 ga.	1/4"
P/2 = 120"	1 1/2" x 16 ga.	1/2"	1" x 16 ga.	3/8"	1" x 18 ga.	3/8"	1" x 20 ga.	1/4"
P/2 = 168"	1 1/2" x 16 ga.	1/2"	1 1/2" x 16 ga.	1/2"	1" x 16 ga.	3/8"	1" x 18 ga.	3/8"
P/2 = 192"	Not Given	1/2"	1 1/2" x 16 ga.	1/2"	1" x 16 ga.	3/8"	1" x 16 ga.	3/8"
P/2 = 193" up	SPECIAL ANALYSIS REQUIRED							

WHEN STRAPS ARE LAP JOINED
USE THESE MINIMUM FASTENERS:

1" x 18, 20, 22 ga. - two #10 or one 1/4" bolt
1" x 16 ga. - two 1/4" dia.
1 1/2" x 16 ga. - two 3/8" dia.
Place fasteners in series, not side by side.

SINGLE HANGER MAXIMUM ALLOWABLE LOAD	
STRAP	WIRE OR ROD (Dia.)
1" x 22 ga.-260 lbs. 1" x 20 ga.-320 lbs. 1" x 18 ga.-420 lbs. 1" x 16 ga.-700 lbs. 1 1/2" x 16 ga.-1100 lbs.	0.106"-80 lbs. 0.135"- 120 lbs. 0.162"-160 lbs. 1/4"-270 lbs. 3/8"- 680 lbs. 1/2"-1250 lbs. 5/8"-2000 lbs. 3/4"-3000 lbs.

TABLE 4- 2
MINIMUM HANGER SIZES FOR ROUND DUCT

Dia.	Maximum Spacing	Wire Dia.	Rod	Strap
10" dn 250 mm dn	12' 3.7 m	One 12 ga. One 2.75 mm	1/4" 6.4 mm	1" x 22 ga. 25.4 x 0.85 mm
11-18" 460 mm	12' 3.7 m	Two 12 ga. or One 8 ga. One 4.27 mm	1/4" 6.4 mm	1" x 22 ga. 25.4 x 0.85 mm
19-24" 610 mm	12' 3.7 m	Two 10 ga. Two 3.51 mm	1/4" 6.4 mm	1" x 22 ga. 25.4 x 0.85 mm
25-36" 900 mm	12' 3.7 m	Two 8 ga. Two 2.7 mm	3/8" 9.5 mm	1" x 20 ga. 25.4 x 1.00 mm
37- 50" 1270 mm	12' 3.7 m	→	Two 3/8" Two 9.5 mm	Two 1" x 20 ga. (2) 25.4 x 1.00 mm
51- 60" 1520 mm	12' 3.7 m	→	Two 3/8" Two 9.5 mm	Two 1" x 18 ga. (2) 25.4 x 1.31 mm
61-84" 2130 mm	12' 3.7 m	→	Two 3/8" Two 9.5 mm	Two 1" x 16 ga. (2) 25.4 x 1.61 mm

Environmental Air, Inc. - Shop Standards	
Date:	
Project:	

DUCT HANGER SIZES

NOTE:

SEE TYPICAL DUCT BRANCH ENTRY CONDITION IN FIG. 2–6.

METAL NOSING MUST BE USED WHEREVER LINER IS PRECEDED BY UNLINED METAL; OTHERWISE WHEN VELOCITY EXCEEDS 4000 FPM (20.3 MPS) USE METAL NOSING ON EVERY LEADING EDGE. NOSING MAY BE FORMED ON DUCT OR BE CHANNEL OR ZEE ATTACHED BY SCREWS, RIVETS OR WELDS.

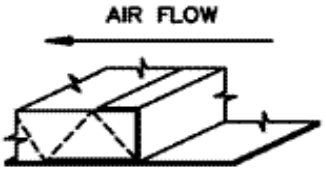

DETAIL – A

METAL NOSING
CHANNEL OR ZEE

INTERIOR WIDTH OF 8" (200 mm) AND LESS DOES NOT REQUIRE PINS.

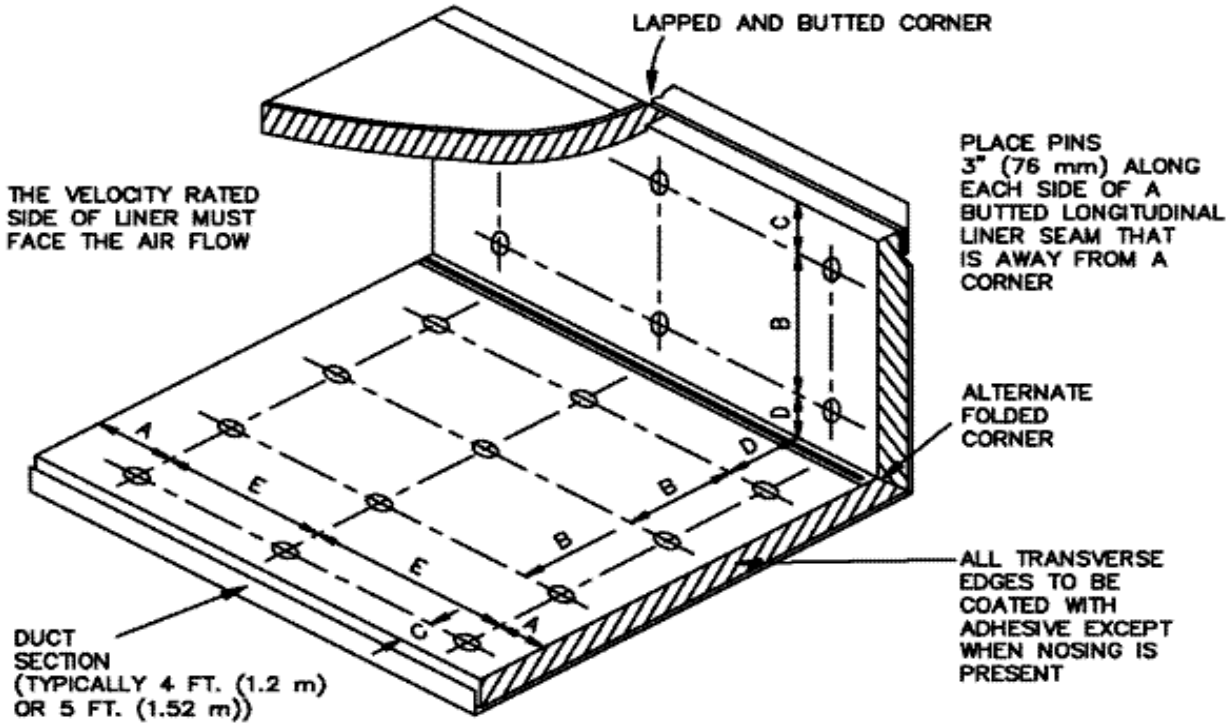

MAXIMUM SPACING FOR FASTENERS.
ACTUAL INTERVALS ARE APPROXIMATE.

LINER ADHERED TO THE DUCT WITH 90% MIN. AREA COVERAGE OF ADHESIVE

"A" PIN ROW MAY BE OMITTED WHEN METAL NOSING IS USED. "E" THEN STARTS FROM THE NOSING.

Velocity*	Dimensions				
	A	B	C	D	E
0 – 2500 FPM (0 – 12.7 MPS)	3" (76.2)	12" (305)	4" (102)	6" (152)	18" (457)
2501 – 6000 FPM (12.7 – 30.5 MPS)	3" (76.2)	6" (152)	4" (102)	6" (152)	16" (406)

*UNLESS A LOWER LEVEL IS SET BY MANUFACTURER OR LISTING AGENCY

INSULATION TYPES

☐ ½" THICK AT 2 LB. DENSITY ☐ 1" THICK AT 1 ½ LB. DENSITY

☐ 1" THICK AT 3 LB. DENSITY ☐ 2" THICK AT 1 ½ LB. DENSITY

Environmental Air, Inc. - Shop Standards	
Date:	
Project:	

DUCT LINER INSTALLATION

DUCT SIZES 19" (483 mm) WIDE AND LARGER WHICH HAVE MORE THAN 10 SQUARE FEET (0.93 SQUARE METER) OF UNBRACED PANEL SHALL BE BEADED OR CROSS BROKEN UNLESS DUCTS WILL HAVE INSULATION COVERING OR ACOUSTICAL LINER. THIS REQUIREMENT IS APPLICABLE TO 20 GAGE (1.00 mm) OR LESS THICKNESS AND 3" WG (750 PA) OR LESS. IT IS UNNECESSARY TO BREAK OR BEAD ALL SIDES UNLESS EACH DUCT DIMENSION REQUIRES IT.

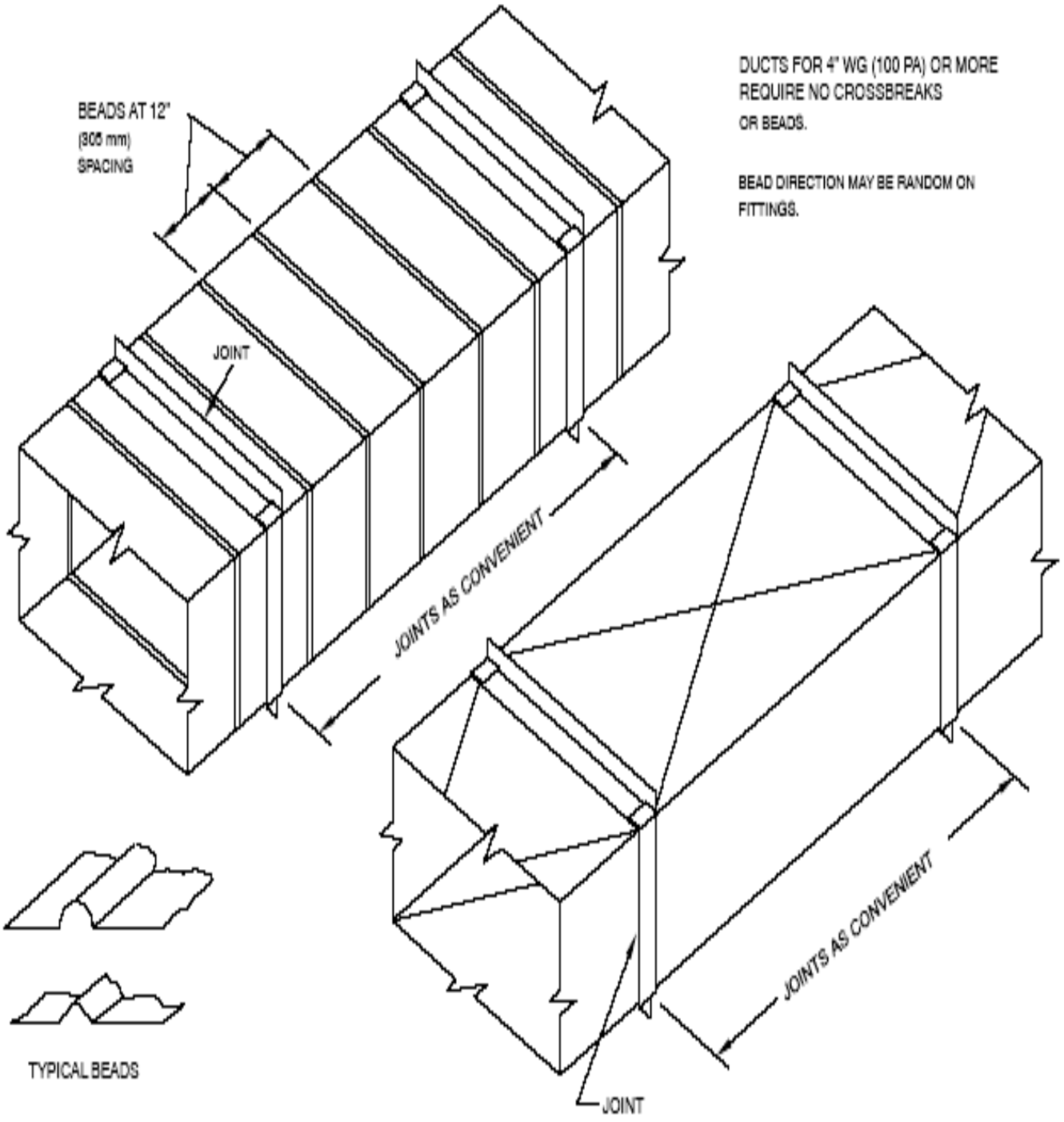

DUCTS FOR 4" WG (100 PA) OR MORE REQUIRE NO CROSSBREAKS OR BEADS.

BEAD DIRECTION MAY BE RANDOM ON FITTINGS.

NOTICE: NEITHER BEADS NOR CROSSBREAKS AFFECT REINFORCEMENT SPACING SCHEDULE.

Environmental Air, Inc. - Shop Standards	
Date:	
Project:	

DUCT RIDIGITY

Cross Broken & Beaded

EVERseal™

Water Based High Velocity Duct Sealant

DESCRIPTION

EVERseal is a commercial or residential grade water based, smooth duct sealant.

BASIC USE

To seal metal joints against air leaks in low, medium, and high pressure duct systems.

TECHNICAL INFORMATION

BASE:	Synthetic latex emulsion
COLOR:	Gray
TYPE:	Water base
WEIGHT:	11.3 ± .3 lbs per gallon
SOLID CONTENTS:	62% ± -2%
VISCOSITY:	450,000 c.p.s.
APPLICATION TEMPERATURE:	35°F to 110°F
SERVICE TEMPERATURE:	0°F to 220°F
STORAGE TEMPERATURE:	35°F to 110°F
DRY TO TOUCH:	1 hour (approximate)
CURE TIME:	24 to 72 hours + (depending on humidity, application, and temperature)
FLASH POINT:	No flash to boiling
MILDEW RESISTANCE:	Excellent
FREEZE THAW STABILITY:	5 cycles
COVERAGE:	25 sq. ft./gal. at 1/16" 50 sq. ft./gal. at 1/32"
ODOR:	Mild (wet) None (dry)
SHELF LIFE:	1 year (unopened container)
CURED SEALANT:	Tough and permanently flexible
PACKAGING:	1/12 gallon tubes (25 tubes/case) 1 gallon pail (4 pails/case) 5 gallon pail 54 gallon drum

UL LISTED UL-181B-M 61MF

ALSO CLASSIFIED c UL us CAULKINGS AND SEALANTS SURFACE BURNING CHARACTERISTICS 51RF

SURFACE BURNING CHARACTERISTICS

USC - Classification
Applied to Inorganic Reinforced Cement Board +

FLAME SPREAD	0
SMOKE DEVELOPED	5

+ - Tested as applied in one 2 in. wide strip covering 11 percent of the test sample area at a coverage rate of 25 sq. ft. per gal.

CNC - Classification
Applied to Inorganic Reinforced Cement Board +

FLAME SPREAD	5
SMOKE DEVELOPED	5

+ - Tested as applied in two 50.8 mm wide strips 203.2 mm OC and covering 22.2 percent of the exposed test sample area at a coverage rate of 0.6 sq m/L

SPECIAL CHARACTERISTICS

- Permanently seals metal duct joints
- Indoor and outdoor use
- For applications up to 10" WG
- UL 181B-M Listed
- UL 723 Classified
- LEED* Compliant
- Remains flexible
- Superior adhesion to metal
- Very good UV, water, and mold resistance
- Manufactured by S.M.W.I.A. Local 12
- Paintable with latex epoxy based paint

DIRECTIONS FOR USE

Surface Preparation: For good brushability, store at room temperature at least 24 hours before applying. Surfaces should be clean, dry and free of any dirt, oil, grease, water or foreign matter.

Application: (DO NOT THIN) Do not apply when rain or freezing temperatures will occur within 36 hours.

When Used In Conjunction With Sheet Metal: Apply by brush, hand, trowel or spray. EVERseal should be applied to duct connections according to all applicable SMACNA standards. Apply to the inside of female fittings and outside of male fittings. Assemble the joint.

Brush sealant over the assembled joint. Thoroughly cover joint and screws with a 2" to 3" wide band. Assembly should cure for 24-72 hours before pressure testing the system. Since field temperature/ humidity conditions may vary, longer set times may be required for specific installations. Apply at a rate of 50 sq. ft. per gallon (1/32" thick).

When Used in Conjunction With UL 181 Listed Flexible Air Ducts: Apply by brush a 1/16" (25 sq.ft. per gallon) coating and allow to dry a minimum of 24-72 hours. Since field temperature/humidity conditions may vary, longer set times may be required for specific installations. Use with mechanical fasteners per Air Duct installation instructions.

Clean Up: Use warm, soapy water to clean up sealant while it is still wet.

When Used In Conjunction With Duct Cover: Allow the sealant to cure fully before encapsulating duct ends with ProGuard, or any duct cover products. You may set the duct upright on a palate and encapsulate just the top, allowing air to flow through the bottom until the sealant has cured.

LIMITED PRODUCT WARRANTY

Ductmate warrants that EVERseal™, when properly installed and maintained, will be free from defects in material and workmanship, and will comply with all written specifications made by Ductmate at the time of sale. Ductmate's warranty shall run for a period of one year from the date of manufacture.

Warranty Limitation
The warranty stated above is in lieu of all other warranties, express or implied, including but not limited to the implied warranties of MERCHANTABILITY AND FITNESS FOR A PARTICULAR PURPOSE. Although Ductmate may have suggested the product, or provided written or oral advice to the Purchaser, it is the Purchaser's responsibility to test and determine the suitability of EVERseal™, for the intended use and purpose, and Purchaser and/or its customer assumes all risk and liability whatsoever regarding such suitability.

Limitation of Liability
In the event of a breach of the above warranty, Ductmate's sole obligation, and Purchaser's sole and exclusive remedy, shall be, at Ductmate's option, repair or replacement of any defective products, or refund of an applicable portion of the purchase price. Ductmate shall have no liability for costs of removal or reinstallation of the product. The Purchaser agrees that no other remedy, including but not limited to loss of profits, loss sales, injury to person or property, or any other special, incidental or consequential damages, shall be available to the Purchaser for any claim arising out of this Agreement, regardless of whether such claim is made in contract or in tort, including strict liability in tort. In no event will Ductmate be obligated to pay damages to the Purchaser in any amount exceeding the purchase price that the Purchaser paid to Ductmate for the allegedly defective product.

KEEP OUT OF REACH OF CHILDREN. Consult MSDS (Material Safety Data Sheet) Before Using

DUCTMATE Industries, Inc.

Charleroi, PA
210 Fifth Street
Charleroi, PA 15022
800-245-3188
724-258-0500
FAX: 724-258-5494

Lodi, CA
810 S. Cluff Avenue
Lodi, CA 95240-9141
800-245-3188
724-258-0500
FAX: 209-333-4678

www.ductmate.com

SFI www.sfiprogram.org
This spec data is printed on paper that meets the Certified Fiber Sourcing requirements of the SFI program and contains 10% recycled content

Distributed By:

Ductmate is a proud member of the following organizations:

SMACNA SPIDA

580 - 05/13

Environmental Air, Inc. - Shop Standards	
Date:	
Project:	

DUCT SEALANT
Everseal

TECHNICAL support bulletin

DP 1010

WATER BASED DUCT SEALANT

A smooth, water based, premium quality, UL Listed, high pressure/high velocity duct sealant for commercial and residential supply and return air duct use.

Recommended Uses:

DP 1010 is recommended for sealing joints, seams, and duct wall penetrations.
DP 1010 is recommended for sealing connections on flexible duct.
DP 1010 is recommended up to 15 inches water column pressure.

Features and Benefits:

- UL Listed
- Excellent Workability
- Crack and Peel Resistant
- Mold and Mildew Resistant
- Excellent Dry Adhesion
- Indoor and Outdoor Usage
- Minimal Shrinkage
- Sag Resistant
- Excellent Water and U.V. Resistance
- Qualifies for LEED™ Credit EQ 4.1
- Meets FDA, USDA, and EPA Standards
- Meets Requirements of NFPA 90A & 90B, ASTM E-84, and UL-723
- Paintable with latex or epoxy paints after cured

Directions For Use:

Uses: DP 1010 may be used to seal joints on metal, flexible and fiberglass duct board supply and return air duct.

Surface Preparation: Surfaces should be clean, dry and free of dirt, oil and any foreign matter.

For sheet metal duct: DP 1010 should be applied to all connections according to SMACNA standards. Brush, caulk, pump or trowel DP 1010 on all duct seams. Apply to TDC/TDF and applied flange corners. Apply to all penetrations in the duct wall including sheet metal screw heads and tie rods. When caulking DP 1010, sealant should be brushed into seams.

For round and oval spiral duct: Apply DP 1010 to the male section of the fitting or to the inside slip duct coupling. Secure with sheet metal screws per manufacturers requirements. Apply a 2-inch band of DP 1010 around outside of joint, covering all screws.

For rigid fiberglass air duct: Assemble sections according to the manufacturers recommendations. Apply a 3-inch by 20 mil band of DP 1010 to the joint. Embed a fiberglass scrim (5 mil, 20 x 10 plain weave, 1.75 oz per sq. yd.) in the sealant and apply another 20 mil coat of DP 1010 over the scrim.

For flexible duct: Install flexible duct per manufacturers instructions using drawbands or mechanical fastener. Apply DP 1010 between the end of the duct and the collar in a 2-inch band. Use DP 1010 to seal all connections of collar to metal duct or rigid fiberglass ductboard.

Pressure Testing: Allow at least 48 hours before pressure testing. Since temperature and humidity conditions may vary, longer cure times may be required for specific installations.

Do not apply when rain or freezing temperatures will occur within 36 hours. Do not thin.

Technical Data:

Color: Gray
Base: Water
Chemical Family: Synthetic Latex
Solids Content: 68 ± 2%
Viscosity: Approx. 300,000 - 400,000 cps
Application Temperature: 40°F - 110°F
Storage: 40°F - 110°F. Do not freeze. If product freezes, allow to return to room temperature before applying.
Freeze/Thaw Stability: 5 cycles no deterioration (DPTM-20)
Service Temperature: -25°F - 200°F
Flammability: Non-flammable wet or dry
Flash Point: No flash to boiling
Shelf Life: 2 Years (unopened containers)
Cure Time: 24-72 hours depending on temperature, humidity, and application
Coverage: Dependent on application thickness, 80-100 sq. ft. at 20-30 wet mils
Clean Up: Use warm water and soap
Packaging: 1/12 gallon tubes, 1 gallon pails, 2 gallon pails, 5 gallon pails, 54 gallon drums
Pressure Classes: Meets all SMACNA pressure classes
Seal Classes: Meets all SMACNA seal classes
VOC: < 30 g/l

ASTM E-84 SURFACE BURNING CHARACTERISTICS
DP 1010 Duct Sealant applied to inorganic reinforced cement board
Flame Spread: 0 Smoke Developed: 0
Test applied in two 2" wide strips 8" on center (coverage 16% of the exposed test sample area) at a spread rate of 250 sq. ft. per gal.
Flash point of finished sealant, closed cup. No flash to boiling.

UNDERWRITERS LABORATORIES INC.
LISTED ADHESIVES
16UK
UL 181 B-M
for use with UL Listed flexible air ducts or connectors
UL LISTED

DESIGN POLYMERICS

11609 Martens River Circle
Fountain Valley, CA 92708
Toll Free 800.641.0808
Phone 714.432.0600
Fax 714.432.0660
www.designpoly.com

Revised 1-15-08

z

Environmental Air, Inc. - Shop Standards	
Date:	
Project:	

DUCT SEALANT
DP 1010

DUCTMATE

PROseal®

SPECIAL CHARACTERISTICS:

- Qualifies for LEED™ EQ Credit 4.1
- UL 723 Classified
- UL 181B-M Listed
- ASTM G21 & G22 Fungal & Bacterial growth resistance rating 0: no fungal growth on surface, no bacterial growth
- Permanently Flexible
- Non-Flammable
- Exceptional Workability
- Will Not Drip or Sag
- Low Brush Drag and Spreadability Reduces Labor Cost

TYPICAL PHYSICAL PROPERTIES AND TECHNICAL INFORMATION

PROSEAL BASE: Synthetic latex emulsion
FIBERSEAL BASE: Synthetic latex emulsion with polypropylene fiber reinforcement
COLOR: Gray
TYPE: Water Base
SOLID CONTENTS: 66% ± 2%
VISCOSITY: 350,000 c.p.s.
APPLICATION TEMPERATURE: 35°F to 110°F
SERVICE TEMPERATURE: -25°F to 200°F
STORAGE TEMPERATURE: 40°F to 85°F
FLAMMABILITY: Non-flammable in both wet and dry state

FLASH POINT: No flash to boiling
FLEXIBILITY: Excellent
MILDEW RESISTANCE: Excellent
WATER RESISTANCE: Excellent
FREEZE THAW STABILITY: 5 cycles
COVERAGE: 25 sq. ft./gal. at 1/16" 50 sq. ft./gal. at 1/32"
ODOR: Mild (wet) None (dry)
SHELF LIFE: 1 year (unopened container)
CURED SEALANT: Tough and permanently flexible
DRY TO TOUCH: 1 hour (approximate)
CURE TIME: 24 to 72 hours + (depending on humidity, application and temperature)

PACKAGING & ORDERING INFORMATION:

ITEM NO.	DESCRIPTION	QTY & WEIGHTS
PROseal T	PROseal 10.5 oz. Tubes	(25) 10.5 oz tubes @ 25 lbs/cs
FIBERseal T	FIBERseal 10.5 oz. Tubes	
PROseal TQ	PROseal QT. Tubes	(12) 32 oz tubes @ 25 lbs/cs
FIBERseal TQ	FIBERseal QT. Tubes	
PROseal 1	PROseal 1 gal. pail	(4) 1 gal pails @ 50 lbs/cs
FIBERseal 1	FIBERseal 1 gal. pail	
PROseal 5	PROseal 5 gal. pail	(1) 5 gal pail @ 64 lbs/pail
FIBERseal 5	FIBERseal 5 gal. pail	
PROseal 55	PROseal 55 gal. drum	(1) 55 gal drum @ 700 lbs/drum
FIBERseal 55	FIBERseal 55 gal. drum	

RECOMMENDED USES
To seal metal joints against air leaks in low, medium and high pressure duct systems.

DIRECTION FOR USE
Surface Preparation: For good brushability, store at room temperature at least 24 hours before applying.
Surfaces should be clean, dry and free of oil, grease and any other foreign material.

APPLICATION: (DO NOT THIN) Do not apply when rain or freezing temperatures will occur within 36 hours.
When Used In Conjunction With Sheet Metal: Apply by brush, hand, trowel or spray. PROseal/FIBERseal should be applied to duct connections according to all applicable SMACNA standards. Apply to the inside of female fittings and outside of male fittings. Assemble the joint. Brush sealant over the assembled joint. Thoroughly cover joint and screws with a 2" to 3" wide band. Assembly should cure for 24 to 72 hours before pressure testing the system. Since field temperature/humidity conditions may vary, longer set times may be required for specific installations. Apply at a rate of 50 sq. ft. per gallon (1/32" thick).
When Used In Conjunction With UL 181 Listed Flexible Air Ducts: Apply by brush a 1/16" (25 sq. ft. per gallon) coating and allow to dry a minimum of 24-72 hours. Since field temperature/humidity conditions may vary, longer set times may be required for specific installations. Use with mechanical fasteners per Air duct installation instructions.

PRESSURE RATING: PROSEAL/FIBERSEAL is recommended for use in HVAC duct systems which do not exceed 15" water column pressure. Fiber glass mesh scrim should be used to reinforce all systems with pressures in excess of 15" and where needed to bridge gaps in ductwork joints which may exceed 1/4".

CLEAN-UP: Use warm soapy water to clean up sealant while it is still wet.

UNDERWRITERS LABORATORIES, INC.
CLASSIFIED
CAULKING AND SEALANTS
SURFACE BURNING CHARACTERISTICS
PROSEAL Duct sealant applied to inorganic reinforced cement board
Flame Spread: 0 Smoke Developed: 0
FIBERSEAL Duct sealant applied to inorganic reinforced cement board
Flame Spread: 0 Smoke Developed: 0
Sealant applied in two 2" wide stripes 4" on center (coverage 16 percent of the exposed test sample area) at a coverage rate of 25 sq. ft. per gallon.
Flash point of finished sealant, closed cup: No flash to boiling.

Environmental Air, Inc. - Shop Standards	
Date:	
Project:	

DUCT SEALANT
ProSeal

Seal

Qualifies for LEED Credit EQ 4.1

UL181B-M
61MF

High Velocity Water Base Duct Sealant

Specifications

- Fire Resistant
- UL 723 Classification
- UL 181B-M Listed
- Conforms to Requirements of NFPA 90A and 90B
- Extremely Flexible
- Water Based
- Resists Mildew
- Base: Synthetic latex emulsion
- Color: Gray
- Type: Water Base
- Weight: 11±.2 lbs per gallon
- Solid Contents: 66% ±2%
- Viscosity: 350,000 c.p.s.
- Application Temp: 35°F to 100°F
- Service Temp: -25°F to 175°F
- Storage Temp: 40°F to 85°F
- Dry To Touch: 1 hour (approx.)
- Cure Time: 24 to 72 hours + (depending on humidity, application, and temperature)
- Flammability: Non-flammable in both wet and dry state
- Flash Point: No flash to boiling
- Mildew Resistance: Excellent
- Water Resistance: Excellent
- Flexibility: Excellent
- Freeze Thaw Stability: 5 cycles
- Coverage: 25 sq.ft./gal. at 1/16" 50 sq.ft./gal. at 1/32"
- Odor: Mild (wet) None (dry)
- Shelf Life: 1 year
- Cured Sealant: Tough and permanently flexible
- Flame Spread: 0
- Smoke Developed: 0
- Ultraviolet Ray and Ozone resistent
- No VOC's

Applied to Inorganic Reinforced Cement Board*

Directions

Surface Preparation: For good brushability, store at room temperature at least 24 hours before applying. Surfaces should be clean, dry and free of any dirt, oil, grease, water or foreign matter

Application: (DO NOT THIN) Do not apply when rain or freezing temperatures will occur within 36 hours

When Used In Conjunction With Sheet Metal: Apply by brush, hand, towel or spray. CL WARD & FAMILY Water Base Duct Sealer should be applied to duct connections according to all applicable SMACNA standards. Apply to the inside of female fittings and outside of male fittings. Assemble the joint. Brush sealant over the assembled joint. Thoroughly cover joint and screws with a 2" TO 3" wide band. Assembly should cure for 24-72 hours before pressure testing the system. Since field temperature/humidity conditions may vary, longer set times may be required for specific installations. Apply at a rate of 50 sq.ft. per gallon (1/32" thick).

When Used In Conjunction With UL181 Listed Flexible Air Ducts: Apply by brush a 1/16" (25 sq.ft. per gallon) coating and allow to dry a minimum of 24-72 hours. Since field temperature/humidity conditions may vary, longer set times may be required for specific installations. Use with mechanical fasteners per Air Duct installation instructions.

Environmental Air, Inc. - Shop Standards	
Date:	
Project:	

DUCT SEALANT
SuperSeal

ALUMA GRIP™

AFT-701

Premium Indoor/Outdoor Duct Sealer on a Roll

ALUMA GRIP is a Peel•N•Seal™ **HEAVY DUTY** pressure sensitive duct joint sealer on a roll. ALUMA GRIP provides an agressive water resistant grip to most surfaces including sheet metal, duct board, flex duct, and duct wrap vapor barriers. THE GRAY MATTER™ butyl adhesive/sealant is 100 % solids. Stays flexible and resists releasing.

TECHNICAL DATA

Appearance	Mill finish aluminum substrate with gray adhesive/sealant
Backing	2 mil foil
Adhesive/Sealant	30 mil THE GRAY MATTER™ 100% solids elastomeric modified butyl
Peel Strength	10 lbs. per linear inch
Tensile Strength	Adhesive/Sealant (only): 445 psi with 60% elongation
Flexibility	Excellent, no cracking
Bonding Time	Immediate aggressive grip, full bond 24 hours.
Time to test	Immediate
Service Temperature	-20°F to 220°F
Weather Resistance	Passes 2000 hours QUV *(When tested in accordance with ASTM G-53)*
Mildew Resistance	Mold and mildew resistant
VOC	0 GPL
Pressure Classes	*SMACNA* ½, 1, 2, 3, 4, 6 and 10 inches w.g.
Seal Classes	*SMACNA* A, B, C
Packaging	50 ft. rolls in 2, 3, 4, 6, 12 inch widths. 50 sq. ft. per case.

- SEALS ON CONTACT
- PREMIUM PERFORMANCE
- EXCEPTIONAL STRENGTH
- INDOOR-OUTDOOR
- PROVEN RELIABILITY

APPLICATION

Apply to outer surface of duct joint only

(after duct is installed)

Temperature	35°F to 110°F
Method	Cut desired length, peel off release liner, and apply. *Removal or repositioning may damage AFT-701 and surface.* Overlap at ends. Rub down with heavy pressure to assure complete contact.
Preparation	Surface must be clean and dry, oil and grease free.
Clean Up	CG-658 or Mineral spirits
Painting	Use paint appropriate for aluminum.

STORAGE

Temperature	35°F to 110°F
Shelf Life	18 to 24 months
Flammability	Non-flammable

PRECAUTIONS

Surfaces must be clean and free of moisture and contamination. Do not apply this product in areas where temperatures will exceed 220°F. Keep out of the reach of children. Review MSDS for safety information prior to use. DO NOT use where acidic or alkaline chemicals are present (ie., lab fume hood, vents, etc.)

For Industrial Professional Use Only.

Printed in U.S.A 03/99 supercedes 06/98

For additional information contact:

Hardcast
CARLISLE

Carlisle Coatings & Waterproofing Incorporated
P.O. Box 1239, 903 West Kirby
Wylie, Texas 75098
Phone: (800) 527-7092 FAX: (800) 285-7430

Environmental Air, Inc. - Shop Standards	
Date:	
Project:	

DUCT SEALANT

Aluma Grip

Submittal Sheet

OWENS CORNING®

SOFTR

All-Service Fiber Glass Duct Wrap

☒ **TYPE 75**
- **1½" (38 mm)**
- **2" (51 mm)**
- **2⅕" (56 mm)**
- **2²⁄₅" (61 mm)**
- **2½" (64 mm)**
- **3" (76 mm)**
- **3½" (89 mm)**
- **4" (102 mm)**

☐ **TYPE 100**
- **1½" (38 mm)**
- **2" (51 mm)**

☐ **TYPE 150**
- **1½" (38 mm)**
- **2" (51 mm)**

SOFTR™ All-Service Fiber Glass Duct Wrap is now reformulated to reduce dust and itch.

Description

SOFTR™ All-Service Fiber Glass Duct Wrap is a blanket of glass fiber insulation factory-laminated to FRK vapor retarder facing. A 2" (50mm) stapling and taping flange is provided on one edge. This product is designed to meet existing performance standards such as NFPA 90A and 90B and other model building and energy codes.

Uses

SOFTR™ All-Service Fiber Glass Duct Wrap is used for external insulation of commercial and residential heating, air conditioning and dual-temperature ducts operating at temperatures from 40°F (4°C) to 250°F (121°C). This insulation, when applied in accordance with installation instructions, will provide the "installed R-value" as published for the product and printed on the facing, assuring specified in-place thermal performance and condensation control.

Features/Benefits

Assured Thermal Performance

When installed in accordance with instructions so that compression is controlled, SOFTR™ All-Service Fiber Glass Duct Wrap provides specified thermal performance. See R-value table below. Operating costs are controlled due to reduction of heat loss or gain through duct walls.

Condensation Control

SOFTR™ All-Service Fiber Glass Duct Wrap helps control moisture condensation on the ductwork as well as on the outer vapor retarder jacket. This helps maintain insulation efficiency and reduces the likelihood of stained ceilings due to moisture damage.

Enhanced Comfort Control

SOFTR™ All-Service Fiber Glass Duct Wrap helps heating and cooling systems to deliver conditioned air to occupied spaces at or near design temperatures. By conserving heating and cooling energy, HVAC systems may operate under reduced load.

Meets Model Energy and Mechanical Codes

SOFTR™ All-Service Fiber Glass Duct Wrap, when correctly installed, complies with model energy codes and standards including ASHRAE 90.1 and 90.2. Architects, contractors, code officials and owners are assured of compliance and "no-problem" inspection. Application of insulation is the responsibility of the engineer and contractor

Flexible and Easy to Install

SOFTR™ All-Service Fiber Glass Duct Wrap is easily cut and fit to flat, curved or irregular duct surfaces for a neat, thermally effective insulation blanket. Because it's easier to install than rigid boards, installation costs are lowered.

Facings

The facing on Owens Corning SOFTR™ All-Service Fiber Glass Duct Wrap is a Foil Reinforced Kraft (FRK) low permeance vapor retarder meeting the requirements of ASTM C 1136, Type II.

Thermal Conductivity

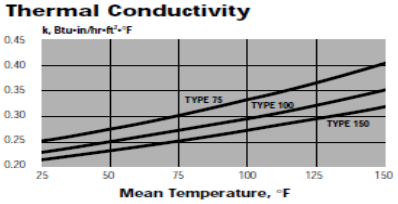

Apparent thermal conductivity curve determined in accordance with ASTM Practice C 1045 with data obtained by ASTM Test Method C 177. Values are nominal, subject to normal testing and manufacturing tolerances.

Availability and Installed R-Values

Standard roll width: 48" (1.2m)
Installed R (RSI) values: When installed in accordance with recommended installation procedures, SOFTR™ All-Service Fiber Glass Duct Wrap will provide installed R (RSI) values as follows:

Nominal Thickness, in. (mm)	Out-of-Package R (RSI) Value[1]		Installed Thickness[2], in. (mm)		Installed R (RSI) Value[1][2]	
TYPE 75 – 0.75 pcf (12 kg/m³)						
1½ (38)	5.1	(0.90)	1⅛	(29)	4.2	(0.74)**
2 (51)	6.8	(1.20)	1½	(38)	5.6	(0.99)
2⅕ (56)	7.4	(1.30)	1⅝	(42)	6.0	(1.06)**
2²⁄₅ (61)	8.0	(1.41)	1¹³⁄₁₆	(46)	6.5	(1.14)
2½ (64)	8.3	(1.46)	1⅞	(48)	6.9	(1.22)
3 (76)	10.0	(1.76)	2¼	(57)	8.3	(1.46)
3½ (89)	11.0	(1.94)	2⅝	(67)	9.7	(1.71)
4 (102)	13.25	(2.33)	3	(76)	11.0	(1.94)
TYPE 100 – 1.00 pcf (16 kg/m³)						
1½ (38)	5.6	(0.99)	1⅛	(29)	4.5	(0.79)
2 (51)	7.4	(1.30)	1½	(38)	6.0	(1.06)
TYPE 150 – 1.50 pcf (24 kg/m³)						
1½ (38)	6.0	(1.06)	1⅛	(29)	4.8	(0.85)
2 (51)	8.0	(1.41)	1½	(38)	6.4	(1.13)

[1] hr•ft²•°F/Btu (m²•°C/W) at 75°F (24°C) mean temperature. [2] Assumes 25% compression of insulation.

Specification Compliance

- ASTM C 1290, Flexible Fibrous Glass Blanket Insulation Used to Externally Insulate HVAC Ducts, Type III
- ASTM C 1136, Flexible Low Permeance Vapor Retarders for Thermal Insulation, Type II (facing only)
- ASTM C 553,* Mineral Fiber Thermal Insulation: Type I – Fiberglas All-Service Duct Wrap Type 75; Type II – SOFTR™ All-Service Fiber Glass Duct Wrap Types 100 and 150. (Operating temperatures to 250°F (121°C) and thermal values to 150°F (66°C) mean.

* Preferred specification is ASTM C 1290.
NOTE TO SPECIFIERS – Federal Specification HH-I-558B (Amendment 3), Form B (covering the duct wrap), and Federal Specification HH-B-100B (covering the facing), are obsolete. These are replaced by the above referenced ASTM specifications.

Physical Property Data

Property	Test Method	Value		
Operating temperature	ASTM C 411	up to 250°F (121°C)		
Insulation jacket temperature limit	ASTM C 1136	up to 150°F (66°C)		
Water vapor permeance	ASTM E 96	0.02 perms		
Water vapor sorption	ASTM C 1104	<3% by weight at 120°F (49°C), 95% R.H.		
Fungi resistance	ASTM C 1338	Meets requirements		
Thermal conductivity k at 75°F mean, Btu•in/hr•ft²•°F (λ at 24°C mean, W/m•°C)	ASTM C 518	Type 75 0.30 (0.043)	Type 100 0.27 (0.039)	Type 150 0.25 (0.036)
Surface burning characteristics	ASTM E 84*	Flame spread: 25* Smoke developed: 50		

* The surface burning characteristics of these products have been determined in accordance with ASTM E 84. This standard should be used to measure and describe the properties of materials, products or assemblies in response to heat and flame under controlled laboratory conditions and should not be used to describe or appraise the fire hazard or fire risk of materials, products or assemblies under actual fire conditions. However, results of this test may be used as elements of a fire risk assessment which takes into account all of the factors which are pertinent to an assessment of the fire hazard of a particular end use. Values are reported to the nearest 5 rating.

Material Requirements to Achieve Installed R-Value

Nominal Thickness, in. (mm)	Installed Thickness, in. (mm)	Stretch-Out Dimensions, in. (mm)		
		Round and Oval Ducts	Square Ducts	Rectangular Ducts
1½ (38)	1⅛ (29)	P+9½ (240)	P+8 (205)	P+7 (180)
2 (51)	1½ (38)	P+12 (305)	P+10 (255)	P+8 (205)
2⅕ (56)	1⅝ (41)	P+13 (330)	P+11 (280)	P+8½ (215)
3 (76)	2¼ (57)	P+17 (430)	P+14½ (370)	P+11½ (290)
4 (102)	3 (76)	P+22 (560)	P+19 (483)	P+16 (406)

P – measured duct perimeter

Environmental Air, Inc. - Shop Standards	
Date:	
Project:	

DUCT WRAP

All Service Fiberglass Wrap

FyreWrap® Elite™ 1.5 Duct Insulation – Grease Duct Single-Layer System

Introduction

Unifrax's FyreWrap® Elite™ 1.5 Duct Insulation is a single-layer flexible enclosure for 1- and 2-hour fire-rated commercial kitchen grease ducts and hazardous exhaust ducts including chemical fume ducts. This slim, compact design offers the lightest system available and results in significant weight, space and labor savings when compared to traditional fire-rated shafts or competitive wrap systems. The system was tested per UL 1978 and complies with pre-2006 editions of the International Mechanical Code (IMC). FyreWrap Elite 1.5 provides the following features:

- Zero clearance to combustibles at all locations on wrap
- 1- and 2-hour fire endurance rating
- Alternate to fire-rated shaft enclosure
- Saves weight, space, labor
- Thinnest, lightest system available
- High-temperature, biosoluble insulation
- GREENGUARD listed for Microbial Resistance

Product Components

Core Material: FyreWrap Elite 1.5 incorporates Insulfrax® Thermal Insulation as its core material. Insulfrax is a high-temperature insulation made from a calcia, magnesia, silica chemistry designed to enhance biosolubility. It provides excellent insulation in a noncombustible blanket product form.

Encapsulating Material: The core insulation blanket is completely encapsulated in an aluminum foil fiberglass reinforced scrim covering. This scrim provides additional handling strength as well as protection from grease and moisture absorption and tearing.

FyreWrap® Elite™ 1.5 Duct Insulation

Typical Product Parameters

Thickness	1.5"
Nominal Density	6pcf
Standard Product Form	Scrim Encapsulated
Product Availability	24"w x 25LF
	48"w x 25LF

Complies with: NFPA® 96 2001 Edition

Typical System Properties

Intertek Laboratories (OPL) Listed	File 14870, Design Nos. UNI/FRD 120-09, UNI/FRD 120-10, UNI/FRD 120-16, UNI/FRD 120-11, Large Duct Size: 52" x 52" (UL1978), 70" x 70" (ASTM E-814)	
California State Fire Marshal Listing	No: 2440-1478:100	
UL 1978 Internal Grease Duct Test (June 2002)	Zero Clearance to Combustibles at All Locations on Wrap	
ASTM E-119 Full Scale Engulfment Test	2-hour Fire Endurance Rating	
ASTM E-814 Through-Penetration Firestop Test	F-Rating = 2 hrs.; T-Rating = 2 hrs	
ASTM E-84/UL 723	Unfaced Blanket	Encapsulated
Flame Spread Rating:	Zero	<25
Smoke Developed Rating:	Zero	<50
ASTM E-136 Non-combustibility Test	Passes	
ASTM C-518 Durability Test	Passes	
ASTM C-518 Thermal Resistance	R value = 6.19 (4.13 per inch)	
ASTM D-6329-03 Microbial Resistance	Resistant to Mold Growth	
ASTM C-411 Hot Surface Performance	Passes	

Omega Point Laboratories Listed

Complies with : NFPA 96 (up through 2001 Edition), 90A, 90B, 101; 2000 and 2003 International Mechanical Code (IMC), 2000 and 2003 International Building Codes (IBC), BOCA National Building Code/1999, 1999 Standard Building Code, 1997 Standard Mechanical Code, and 1997 Uniform Building Code (UBC).

Member IFC International FireStop Council

Environmental Air, Inc. - Shop Standards	
Date:	
Project:	

DUCT WRAP

High Temperature

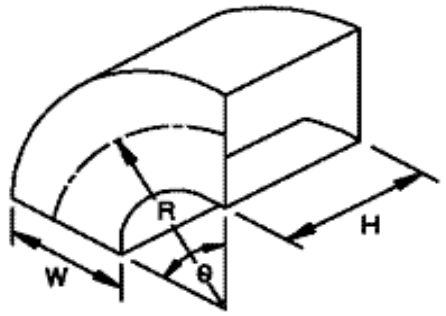

TYPE RE 1
RADIUS ELBOW

CENTERLINE $R = \frac{3W}{2}$ UNLESS OTHERWISE SPECIFIED θ IS NOT RESTRICTED TO 90 . SQUARE THROAT, $\frac{R}{W} = 0.5$, MAY BE USED, UP TO 1000 FPM (5 mps).

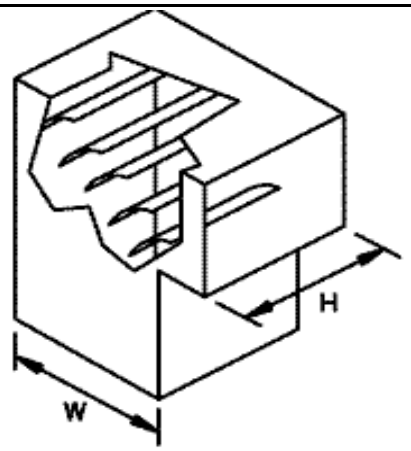

TYPE RE 2
SQUARE THROAT ELBOW
WITH VANES

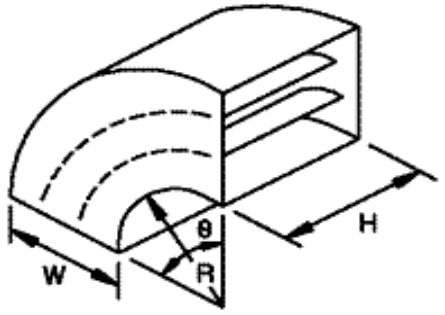

TYPE RE 3
RADIUS ELBOW
WITH VANES

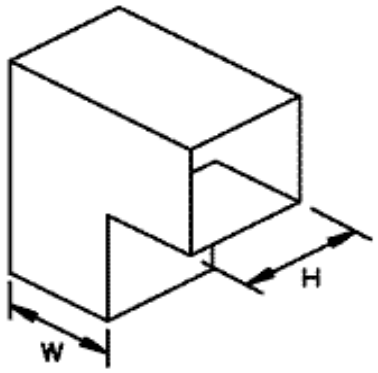

TYPE RE 4
SQUARE THROAT ELBOW
WITHOUT VANES
(1000 FPM (5 mps) MAXIMUM VELOCITY)

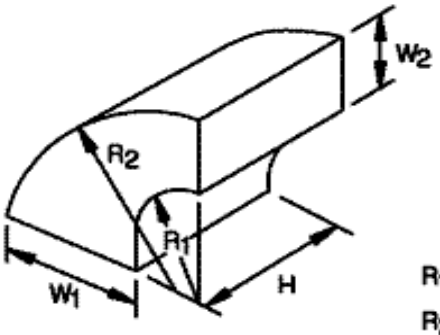

$R_1 = 3/4 \quad W_1$

$R_2 = R_1 + W_2$

TYPE RE 5
DUAL RADIUS ELBOW

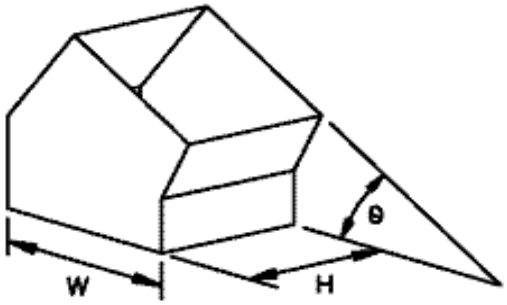

TYPE RE 6
MITERED ELBOW

Environmental Air, Inc. - Shop Standards	
Date:	
Project:	

ELBOWS
Rectangular

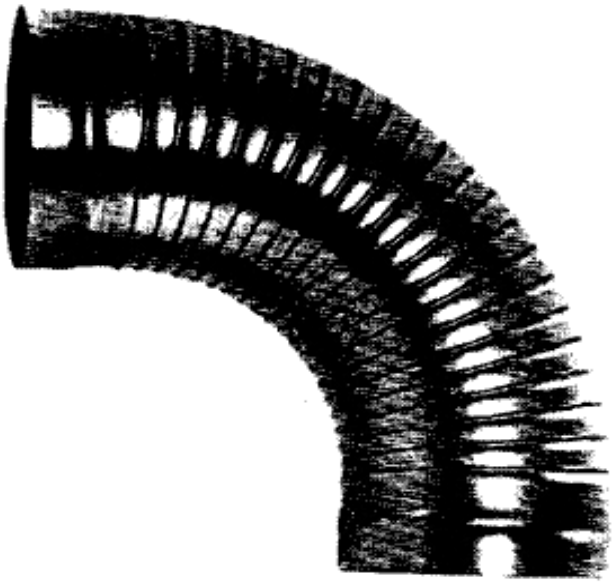

PLEATED

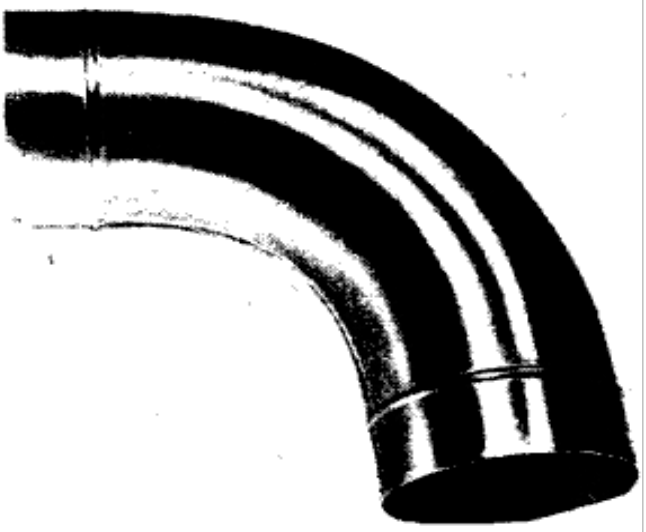

STAMPED

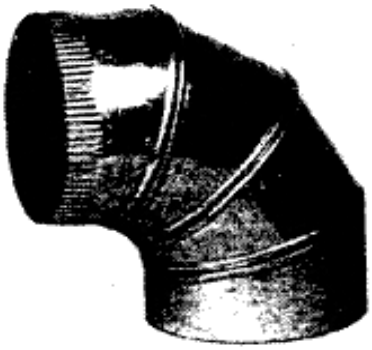

ADJUSTABLE

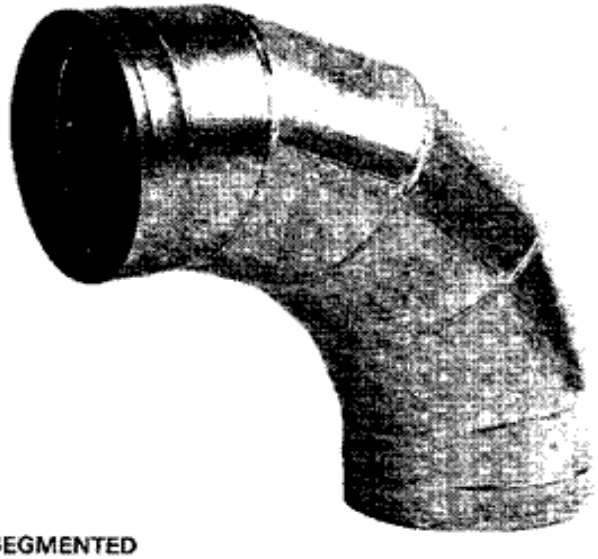

SEGMENTED

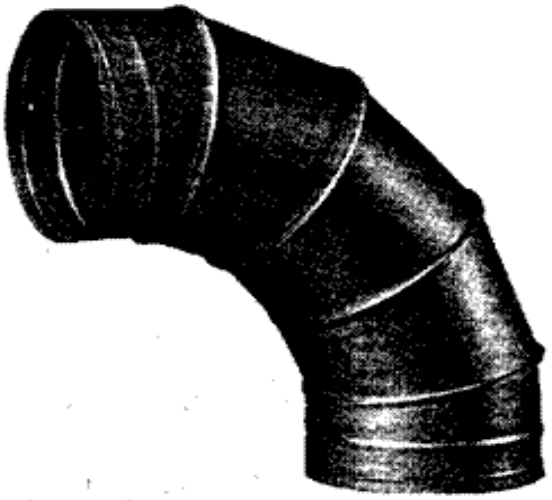

SEGMENTED
STANDING SEAM

Environmental Air, Inc. - Shop Standards	
Date:	
Project:	

ELBOWS
Round

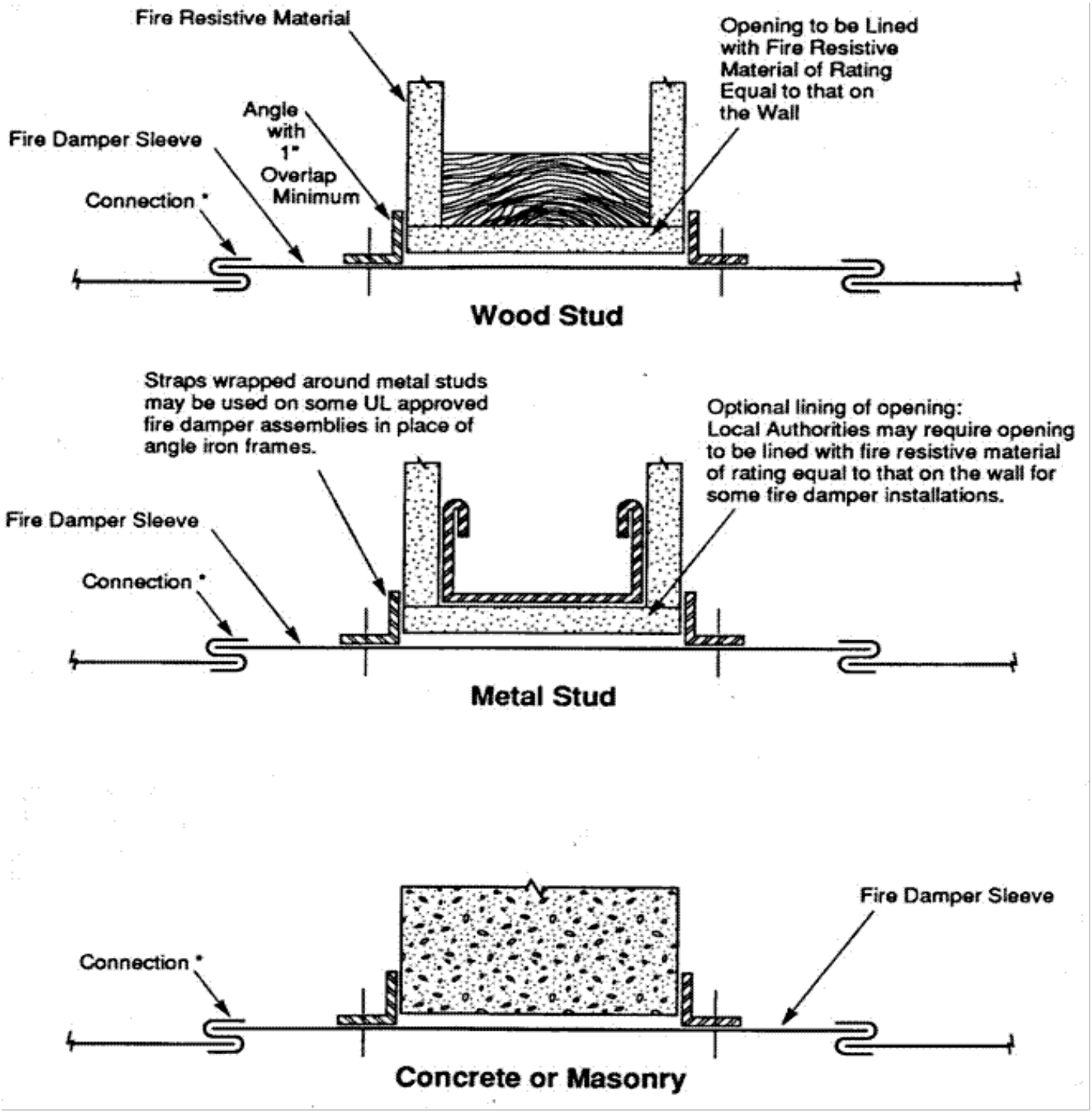

Environmental Air, Inc. - Shop Standards	
Date:	
Project:	

FIRE DAMPER MOUNTING

Johns Manville

PRODUCT DATA SHEET
Firetemp ® CI Intumescent Caulk

Description
Firetemp® CI caulk is a latex-based, intumescent caulk designed to stop the passage of fire, smoke, and fumes through fire-rated separations. Firetemp® CI caulk forms a durable and flexible seal after curing.

Applications
Firetemp® CI caulk provides an effective firestop between penetrating materials, such as metal pipes, conduit, cables, and ducts, and most common floor, wall, ceiling, and joint construction, in any combination of wood, concrete, concrete block, steel and gypsum materials.

Advantages
Intumescent. When exposed to high temperatures or fire, Firetemp® CI caulk expands in volume to quickly close off voids left by melting or burning construction materials. After fully cured Firetemp® CI can be painted over using a latex-based paint.

Single Component
Firetemp® CI caulk can be installed directly into an opening or joint without mixing or the use of additional materials such as metal collars or wraps. This simplifies installation and minimizes the materials needed at the jobsite.

Versatility
Firetemp® CI caulk adheres easily to dry or damp concrete, wood, metal, and other common building material surfaces.

Flexibility
Firetemp® CI caulk, when used in joints, accommodates up to 33 percent joint movement compression/extension. It remains flexible and fully resistant to water after curing.

Systems Testing and Standards
Firetemp® CI caulk has been tested for hundreds of firestop installations and meets or exceeds the requirements of ASTM E 814, ASTM E 119, UL 1479, UL 2079, ULC S115-M95, and CAN/ULC S101. Underwriters Laboratories (UL) is a third party, fire endurance testing agency accredited by ICBO, BOCA and SBCCI (National Evaluation Services) in the United States.

Firetemp® CI caulk becomes an integral component in a complete building system of walls, pipe penetrations, HVAC ducts, joints, and the like. For this reason, its physical compatibility to other products used in these complex configurations requires more than the routine firestopping product testing. The results of these additional tests are listed in Table 1, Firetemp® CI Caulk Physical & Chemical Properties.

Firetemp® CI caulk has proven that it has all of the physical characteristics desired in a firestopping product. Once installed and cured, it has excellent stability, even after four weeks at freezing temperatures of -15°F (-26°C) and exposure to extreme temperatures of 300°F (149°C) for 24 hours. Dimensional changes were well within the accepted standards (<2% per ASTM C 356). Dynamic testing has demonstrated Firetemp® CI caulk's highly elastic properties.

When tested in simulated fire conditions, this intumescent caulk expanded uniformly, to at least eight times its original volume, without causing failure to other components. When tested per ASTM E 84, the flame spread was <25 and smoke developed was <50.

Corrosion and microbial growth were tested using procedures outlined in ASTM C 665. Firetemp® CI caulk does not promote the corrosion of steel, copper, or aluminum, but may cause discoloration on galvanized metal surfaces. Also, Firetemp® CI caulk does not support mold growth.

Table 1.
Physical and Chemical Properties

Property	Firetemp CI Caulk
Colour	Rust red
Density	90-100 pcf
PH	8
Viscosity	640,000 cps
Moisture Adsorption (Wt%)	< 4%
Solids Content (Wt%)	82%
Elasticity	up to 33%
Intumescence	800%
UV Resistance (QEV High Intensity Cycle)	
1500 hrs, 200 cycles	Pass
Stability (dimension, cracks, blisters, exfoliation, flexibility)	
Freezing: -15°F (-26°C), 28 days	Pass
75–120°F (24–49°C), 28 days	Pass
200°F (93°C), 24 hours	Pass
300°F (149°C), 24 hours	Pass
Dimensional Change	
Freezing: -120°F (-84°C), 28 days	< 0.3%
300°F (149°C), 24 hours	< 1.5%
Corrosion (ASTM C 665)	
Steel	Pass
Copper	Pass
Aluminum	Pass
Stress Corrosion Cracking for Austenitic Stainless Steel (ASTM C 692)	Pass
Microbial Growth (ASTM C 665)	Pass
Surface Burning Characteristics (ASTM E 84)	
Flame	10
Smoke	10
Smoke Toxicity NBS Chamber (ASTM E 800)	Pass
STC Breached Wall Recovery (full, partial, none) (ASTM E 90-90)	Full
Storage Temperature	4° C - 32° C (45° F - 90°F)
Application Temperature	4° C - 32° C (45° F - 90°F)
In Service Temp	up to 49° C (120°F)

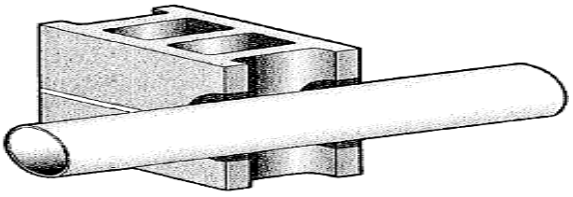

Typical Pipe Penetrations

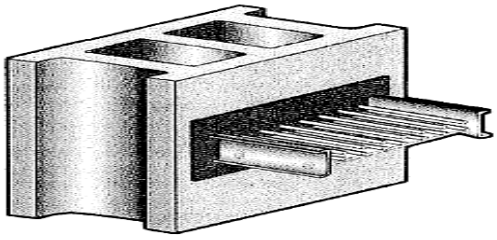

Typical Cable Penetrations

Environmental Air, Inc. - Shop Standards	
Date:	
Project:	

FIRESTOPPING

Flexible Duct Systems

25' Insulated
UL 181
Class 1 Air Duct

Thermal Performance

UPC #070
R-Value 4.2

All thermal performance (R-Values) are classified by Underwriters Laboratories in accordance with ADC Flexible Duct Performance and Installation Standard (1991) using ASTM C-518 (1991), at installed wall thickness, on flat insulation only.

Description

ATCO #070, 076, and 078 are UL 181, Class 1 Air Ducts and are manufactured with a tri-directional fiberglass scrim reinforced, grey polyester outer jacket. The inner core of all three products is air-tight and designed for low-to-medium operating pressures in HVAC systems. ATCO #076 and 078 have increased insulation for superior thermal performance.

Construction

A double lamination of tough polyester which encapsulates a steel wire helix forms the air-tight inner core of the ATCO #070, 076, and 078. The double-layer core of each product is wrapped in multiple thicknesses of fiberglass insulation. All three products are sheathed in a rugged and durable tri-directional reinforced, grey polyester jacket.

FEATURES & BENEFITS

Air-tight Inner Core - Energy efficient / No fiberglass erosion into air stream.
Encapsulated Wire Helix - No unraveling when cut to length / Quick installation
Smooth Inner Core - Low friction loss / Low operating cost.
Thick Blanket of Fiberglass Insulation - Energy efficient / Excellent thermal characteristics
Tough Reinforced Grey Polyester Jacket - Tear and puncture resistant / Low maintenance.
Lightweight Compact Carton - Reduces warehouse and Jobsite handling cost.

APPLICATIONS & CODE COMPLIANCES*

ATCO #070, 076, and 078 are designed for indoor use as a supply and return air duct in residential and commercial low-to-medium pressure heating and air conditioning systems. All three models can be used as a complete air duct system and/or a branch duct connecting to mixing boxes, diffusers, light troffers, room inlets, or other terminal devices. UL 181, NFPA 90A & 90B, IMC, IRC, UMC 10-1 (ICC ES REPORT NO. ESR-1268), HUD 515-2.1 (b), Cities of Chicago, New York, San Francisco, County of Dade (Florida), California State Fire Marshal.*

*ATCO recommends that you check with the local code body having jurisdiction in your area to determine applicable codes.

PRODUCT DATA

- Length: 25', 50' (Other lengths available as special order)
- Diameter: 3", 4", 5", 6", 7", 8", 9", 10", 12", 14", 16", 18", 20", 22"
- Vapor Barrier: Tri-directional, scrim reinforced grey polyester
- End Treatment: 25', 50' -plain ends
- Packaging: 1 piece per carton

INSTALLATION

Air duct connections and joints shall be made per installation instructions outlined by ATCO Rubber Products, Inc. and as required by the UL 181 listing procedure.

(Installation instructions are included inside each carton.)

STRAIGHT RUN

* FD 72-R1 Test Code of the Air Diffusion Council. Friction loss is computed in inches of water gauge per 100 ft. of duct. By using CFM or FPM values for a given duct dimension, the friction loss can be determined. Conversion of CFM to FPM also can be made.

PERFORMANCE DATA

UPC #070 R-Value 4.2	UPC #076 R-Value 6.0	UPC #078 R-Value 8.0

- Rated Positive Pressure: 10" w.g. per UL-181 (UL Listed pressure) ratings are determined in straight lengths @ ambient termperatures.)
- Recommended Operating Pressures: (Determined in a 90° bend at elevated temperatures in accordance with ADC FD 72-R1 Test Code.)

  Maximum Positive:
  6" w.g. - 4" thru 12" Dia.
  4" w.g. - 14" thru 22" Dia.
  (With factory installed metal collars, 2" w.g. - all diameters)
  Maximum Negative: 3/4" w.g. - all diameters
  Maximum Velocity: 5,000 FPM

- Vapor Transmission: .6 perms
- Maximum Operating Temperatures:
  -20°F to 140°F Continuous (@ maximum pressure)
  -20°F to 180°F Continuous (@ 2" pos. w.g. max.)
  -20°F to 250°F Intermittent (@ 1/2" pos. w.g. max.)
- Flame Spread: 25 max
  Smoke Developed: 50 max

Warranty - ATCO warrants that all flexible ducts will be free from defects in material and workmanship for a period of five years from the date of purchase only if the ducts are installed in accordance with ATCO's installation instructions and under conditions specified in ATCO's performance data. The buyer's exclusive remedies for any defect in the flexible ducts shall be replacement or refund of the purchase price, at ATCO's option. ATCO MAKES NO OTHER WARRANTIES, EXPRESS, IMPLIED, STATUTORY OR OTHERWISE. IN PARTICULAR, ATCO MAKES NO WARRANTY OF MERCHANTABILITY OR FITNESS FOR A PARTICULAR PURPOSE. ATCO SHALL HAVE NO LIABILITY TO THE BUYER OR ANY THIRD PARTY FOR INCIDENTAL OR CONSEQUENTIAL DAMAGES OF ANY KIND WHATSOEVER, INCLUDING, BUT NOT LIMITED TO, PERSONAL INJURY, PROPERTY DAMAGE, LOST PROFITS OR OTHER ECONOMIC INJURY DUE TO ANY DEFECT IN THE FLEXIBLE DUCTS. MATERIALS AND SPECIFICATIONS FOR THE FLEXIBLE DUCTS ARE SUBJECT TO CHANGE WITHOUT NOTICE.

Environmental Air, Inc. - Shop Standards	
Date:	
Project:	

FLEX DUCT

ATCO - Series 70, Insulated

Thermaflex®

SUBMITTAL SHEET
for Flexible Duct

M-KC
Insulated Flexible Air Duct for Environmental Air Handling Systems

CODES/STANDARDS	GreenGuard Certified for Superior Indoor Quality	Listed and labeled by Underwriters' Laboratories, Inc., as a Class I Air Duct, Standard 181. It complies with the latest NFPA Bulletins 90A and 90B. Meets FHA and other U.S. government agency standards. Flame spread: not over 25. Smoke developed: not over 50.
FABRIC TYPE		Coated fiberglass woven fabric.
INSULATION	R-4.2 R-6.0	1 1/2", .76 lb. minimum density fiberglass blanket. 2", .76 lb. minimum density fiberglass blanket.
EXTERIOR FACING AND VAPOR BARRIER		Fiberglass scrim reinforced aluminized polyester film vapor barrier.
THERMAL PERFORMANCE R-VALUE		ALSO CLASSIFIED BY UNDERWRITERS LABORATORIES, INC.® IN ACCORDANCE WITH ADC FLEXIBLE DUCT PERFORMANCE AND INSTALLATION STANDARDS (1991) USING ASTM C-518 (1991) AT INSTALLED WALL THICKNESS ON FLAT INSULATION ONLY R-4.2/R-6.0
VAPOR BARRIER PERMEANCE		.05 Perm per ASTM. Method E96, Procedure A.
TEMPERATURE RANGE		– 20° F to 250° F.
SIZES, ID		4 5 6 7 8 9 10 12 14 16
LENGTH (feet)		25 ft.
INSIDE BEND RADIUS (inches)		4 5 6 7 8 9 10 12 14 16
STEEL WIRE		Coated spring steel wire helix.
RATED VELOCITY		6000 fpm.
MAX RATED PRESSURE (inches water column)	**POSITIVE**	16 inches (4-10 in. dia.) 10 inches (12-16 in. dia.)
	NEGATIVE	2 inches

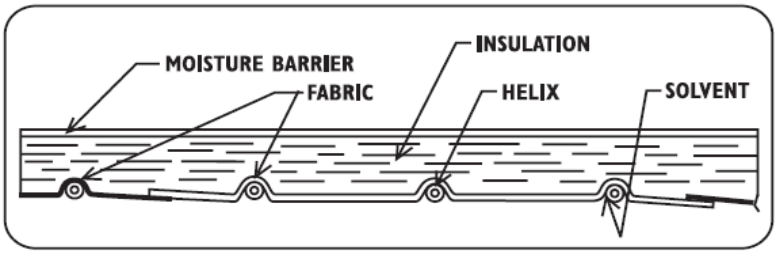

THERMAFLEX®– A Division of Flexible Technologies, Inc., a subsidiary of Smiths Group plc.
Customer Service Departments:
- 528 Carwellyn Rd. • Abbeville, SC 29620 • 864-459-5441
- 9101 Perkins St. • Pico Rivera, CA 90660 • 562-801-1634
- 1040A Jayson Court • Mississauga, Ontario L4W 2V5 • 905-602-9660

Environmental Air, Inc. - Shop Standards	
Date:	
Project:	

FLEX DUCT

MKC - High Pressure

Gaskets

440™ BUTYL GASKET

Ductmate 440 is a non-skinning, non-drying synthetic polymer based sealing tape, capable of withstanding joint movement without cracking.

PERFORMANCE PROPERTIES:

Solids: 99.8%
Color: Off White
Density: 1.45 gm/cc ± .05
Flash Point: 400°F - Penske Martens CC (ASTM E-134)
Shelf Life: 1 yr. minimum
Life Expectancy: 20 yrs. minimum
Service Temperature: -65°F to 220°F
Oil Migration: None (applied to galvanized steel and subjected to a temperature of 158°F for one week)
Flexibility: No cracks when bent around a 1/4" mandrel after being subjected to 3 wks at 75°F, 24 wks at -40°F and 3 wks at 158°F
Adhesion: Excellent to most non-porous surfaces
Specifications: MIL-C 0 18969 B, Type 2, Class B
Elongation (%min): Over 300%
UL 723 (ASTM E-84-84) Test Data:
Flame Spread: 10
Fuel Contribution: 0
Smoke Density: 10

ORDERING INFORMATION

PART #	PACKAGING
440 3/16 X 5/8	(20) 25 ft/rolls 500 ft/case @ 45lbs/case
440 3/16 X 1 (used w/ DM45)	(16) 25 ft/rolls 400 ft/case @ 53lbs/case

NEOPRENE GASKET

Neoprene Gasket Tape is a synthetic closed cell, rubber-based sealing tape. Excellent for connecting ductwork which must be taken apart periodically for cleaning purposes, or for fire damper breakaway installations.

PERFORMANCE PROPERTIES:

Color: Black
Density: (p.c.f.) average 8.12
Water absorption by wt. (max): 5%
Compression deflection (p.s.i.): 2-5
Temp range(°F):
Low (Flex without cracking -40°F
High continuous 150°F
High intermittent 200°F
UL 94 HF-1-Passes

ORDERING INFORMATION

PART #	PACKAGING
NEO 5/16 X 3/4 (Recommended for spiralmate, ovalmate, & econoflange round & oval)	(15) 50 ft/rolls
	750 ft/case @ 15 lbs/case
NEO 5/16 X 1 (Used with DM45)	(20) 50 ft/rolls
	1000 ft/case @ 23 lbs/case
VM GASKET-L 5/16 X 1 1/4	(16) 50 ft rolls
	800 ft/case @ 21 lbs/case

SPECIALTY GASKETS

- F.D.A. GRADE FOR FOOD PROCESSING SYSTEMS
- POLYETHYLENE FOR ABRASIVE MATERIALS
- SILICONE, FIBERGLASS & CERAMIC FIBER ROPE FOR HIGH-TEMP APPLICATIONS

***MINIMUM QUANTITIES & EXTRA LEAD TIME NEEDED. CONSULT DUCTWARE® FOR MORE INFORMATION.**

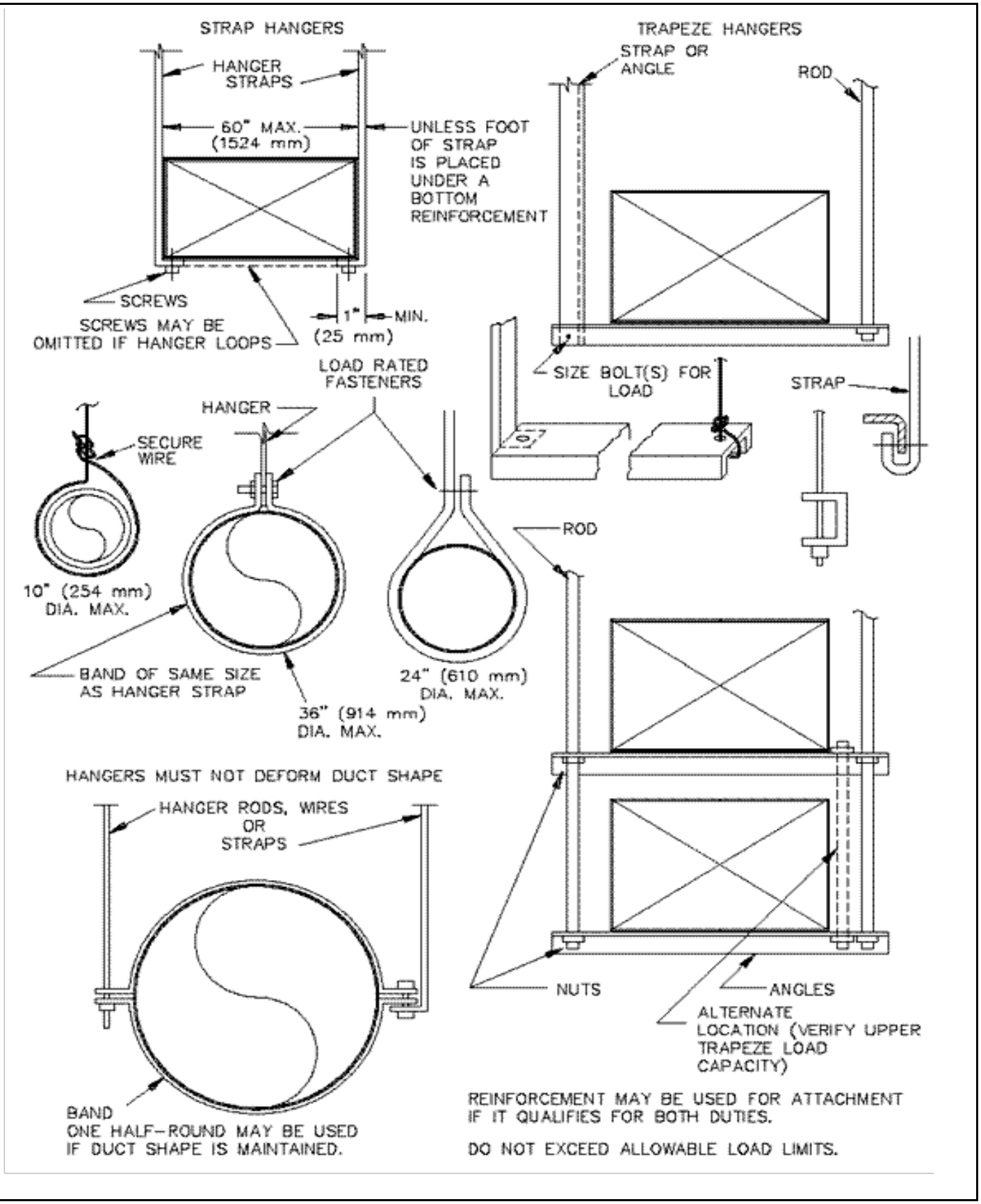

Environmental Air, Inc. - Shop Standards	
Date:	
Project:	

HANGER ATTACHMENT

Lower

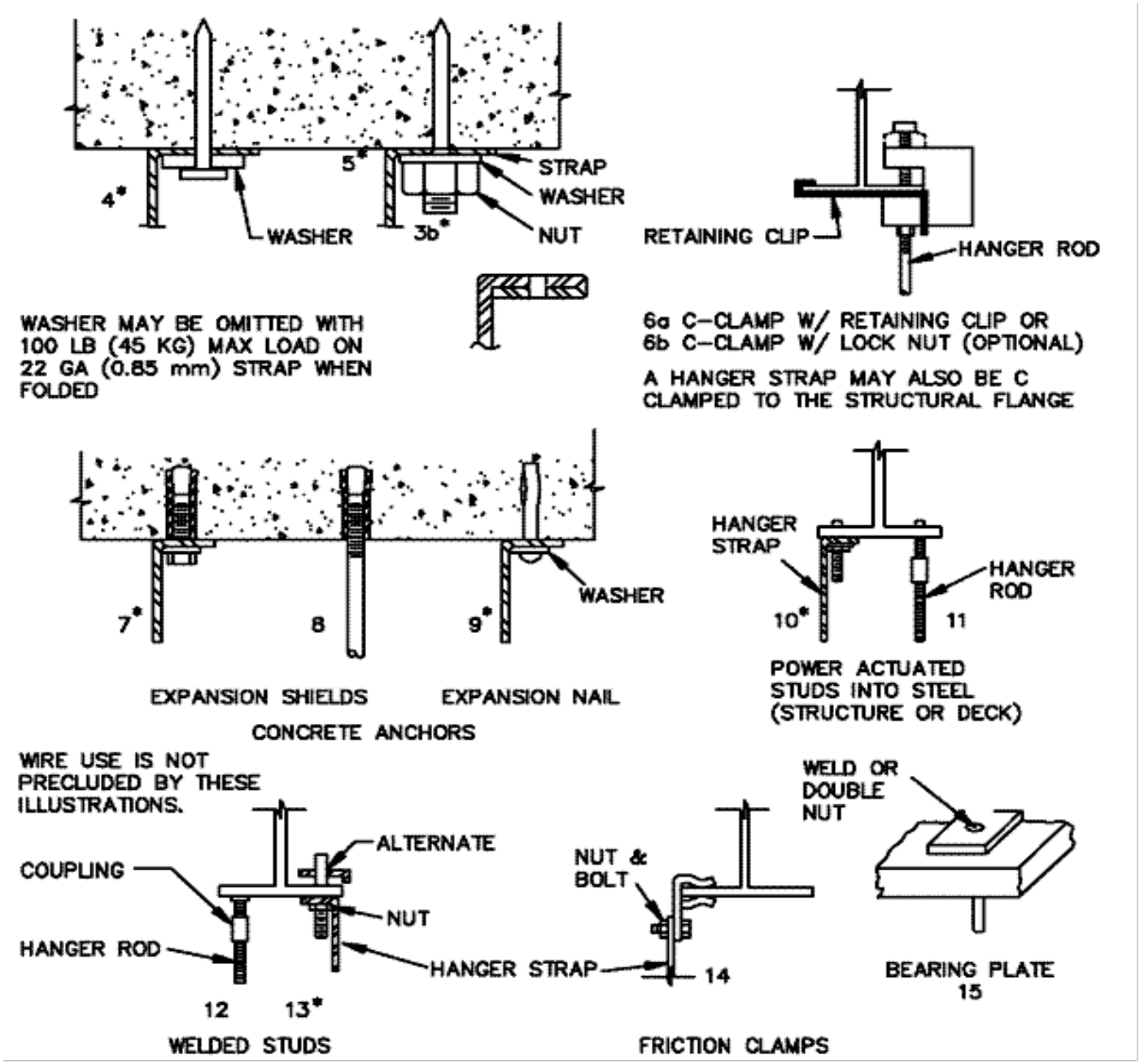

Environmental Air, Inc. - Shop Standards	
Date:	
Project:	

HANGER ATTACHMENT

Upper

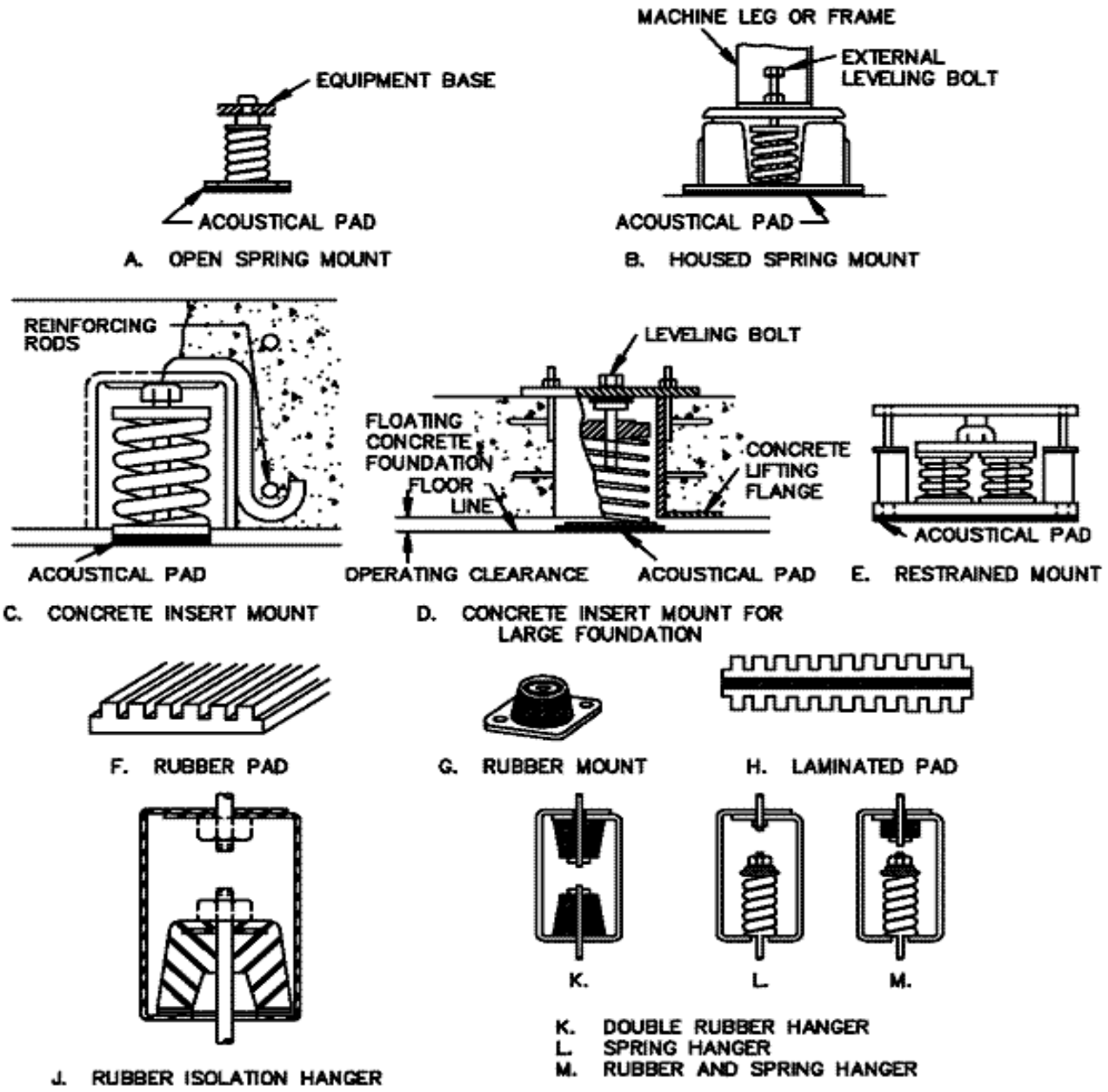

GENERAL PRECAUTIONS

1. ADJUST FOR PROPER ALIGNMENT AND LOADING.
2. EXAMINE DEAL LOAD AND OPERATING LOAD CONDITION.
3. AVOID "GROUNDING" THE ISOLATOR.
4. MAINTAIN ALIGNMENT OF THE SYSTEM COMPONENTS BEING ISOLATED WITHOUT IMPOSING EXCESS STRESS.
5. CHECK HANGER ROD SIZE FOR ALLOWABLE LOADS AT THE ISOLATED DEVICE AND AT THE UPPER AND LOWER ATTACHMENTS TO STRUCTURES, DUCT, EQUIPMENT, ETC.
6. CONSULT MANUFACTURER FOR APPLICATION DATA.

Environmental Air, Inc. - Shop Standards	
Date:	
Project:	

ISOLATION DEVICES

Typical

TRANSVERSE

PLAIN "S" SLIP
T-5

T-1 - DRIVE

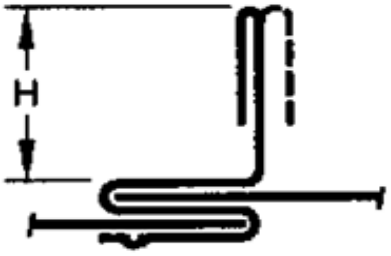

STANDING S
T-10

SLIP-ON
FLANGE
(CONSULT MFRS.)

LONGITUDINAL

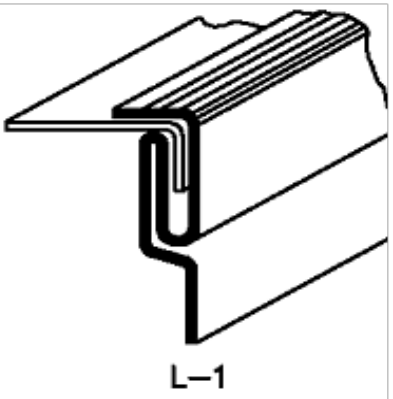

L–1

PITTSBURGH LOCK

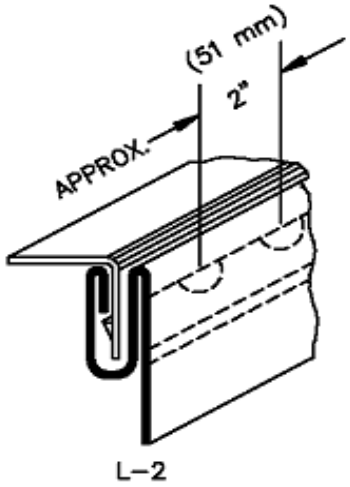

L–2

BUTTON PUNCH SNAP LOCK

Environmental Air, Inc. - Shop Standards	
Date:	
Project:	

JOINTS & SEAMS
RECTANGULAR DUCT

TRANSVERSE

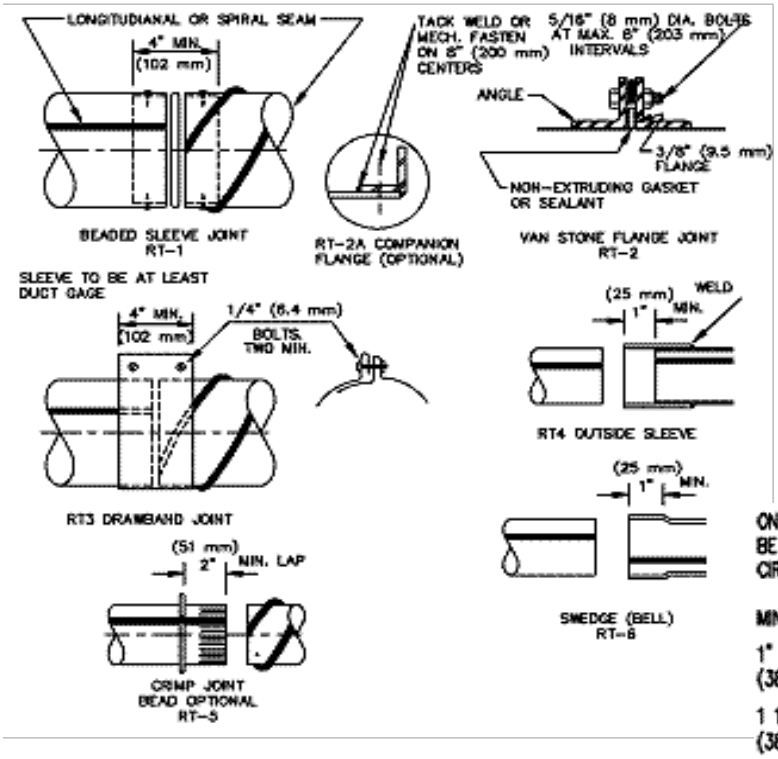

ON JOINTS RT-1, 4, 5 AND 6 SCREWS MUST BE USED AT UNIFORM INTERVALS 15" (381 mm) MAXIMUM ALONG THE CIRCUMFERENCE; THREE SCREWS MINIMUM ON 14" (35.6 mm) OR LESS DIAMETER.

MIN. FLANGE SIZES FOR RT-2 AND 2A

1" x 1" x 10 GA. ON 14" MAX DIA.
(38.1 mm x 38.1 mm x 3.2 mm OR 35.6 mm MAX. DIA.)

1 1/2" x 1 1/2" x 1/8" DIA. OVER 14"
(38.1 mm x 38.1 mm x 3.2 mm OVER 35.6 mm)

LONGITUDINAL OR SPIRAL SEAM DUCT IS ACCEPTABLE FOR ALL JOINTS EXCEPT RT-4 AND 6 (FOR LONGITUDINAL ONLY)

LONGITUDINAL

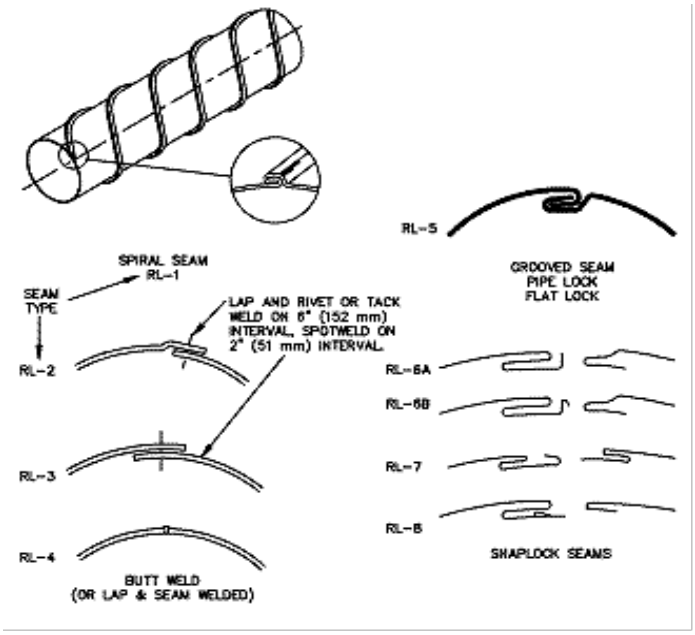

PRESSURE CLASS IN W.G. (Pa)	SEAM TYPE PERMITTED
POSITIVE	
To +10" W.G. (2500)	RL-1,4,5 *(2*)
To +4" W.G. (1000)	RL-1,2,3,4,5,
To +2" W.G. (500)	ALL
NEGATIVE	
To -10" W.G. (-2500)	RL-1,4 (2*,3*)
To -4" W.G. (-1000)	RL-1,2,3,4 (5**)
To -1" W.G. (-250)	ALL

*ACCEPTABLE IF SPOTWELDED ON 1" (25 mm) INTERVALS OR TACK WELDED ON 3" (75 mm) INTERVALS.

**RL-5 PRESSURE LIMIT IS -3" W.G. (-750 Pa)

Environmental Air, Inc. - Shop Standards	
Date:	
Project:	

JOINTS & SEAMS
ROUND DUCT

FlexmasterUSA

SUBMITTAL DATA

5235 Ted Street, Houston, Texas 77040,
713 / 462-7694, Fax 713 / 939-8441

TYPE NI-TL
NON-INSULATED

TRIPLE LOCK STANDARD ALUMINUM METAL FLEXIBLE DUCTING

CONSTRUCTION FEATURES

Flexmaster Triple Lock Aluminum ducting is an all metal flexible duct that is constructed entirely without the use of adhesive. The Triple Lock Mechanical joint makes an air tight seam, while the circumferential corrugations provide excellent strength and flexibility. Minimum bend radius to center line is one diameter. However our recommended radius is 11/2 diameters in accordance with accepted practice. Triple Lock Aluminum ducting may be easily cut to size and hand formed into elbows or offsets to suit job conditions without subsequent sagging or droop. Triple Lock has much lower pressure loss than conventional cloth ducts due to the small but consistent corrugations that provide both strength and flexibility.

TECHNICAL DATA

Standard lengths (feet).....8', Special lengths on request

Inside Diameter (Inches).....3",4",5",6",7,"8",9",10",12",14",15",16",18",20"

Inside Bend Radius (inches).....Min. One Dia.

Air Friction Loss.....See Friction Loss Chart

UL Listing.....UL 181 / ETL Class 0 Air Duct

Standard, Codes.....NFPA 90A and 90B, HUD/FHA, MIN Property Std.

Rated Velocity.....5500 F.P.M.

Internal Working Pressure (W.G.).....10" w.g. positive thru 16" Dia.
6" w.g. positive 18" & 20" Dia.
12" w.g. negative thru 16" Dia.
4" w.g. negative 18" & 20" Dia.

Minimum Burst Pressure.....2 1/2 times working pressure

Operating Temperature Range.....-60° to +600°F

Flame Spread.....Less than 0

Smoke Developed.....Less than 0

Environmental Air, Inc. - Shop Standards	
Date:	
Project:	

METAL FLEXIBLE CONNECTIONS
Exhaust & Return Final Connections

OFFSETS 2 AND 3 AND TRANSITIONS MAY HAVE EQUAL OR UNEQUAL INLET AND OUTLET AREAS. TRANSITIONS MAY CONVERT DUCT PROFILES TO ANY COMBINATION FOR RECTANGULAR, ROUND OR FLAT OVAL SHAPES.

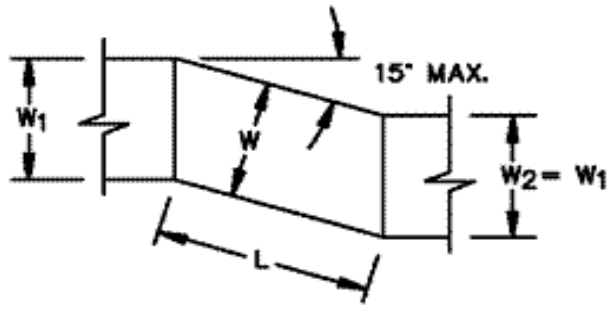

OFFSET TYPE 1
(ANGLED)

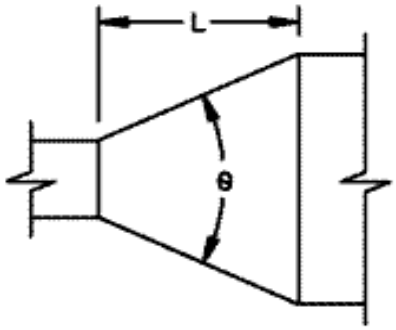

CONCENTRIC TRANSITION
θ MAX. 45° DIVERGING, 60° CONVERGING

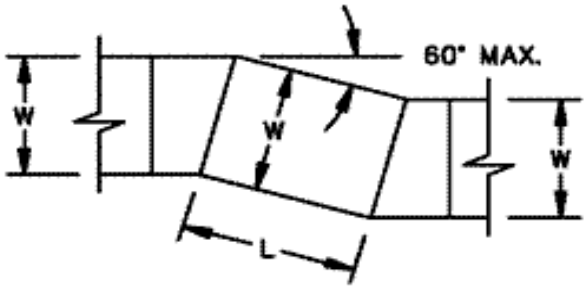

OFFSET TYPE 2
(MITERED)

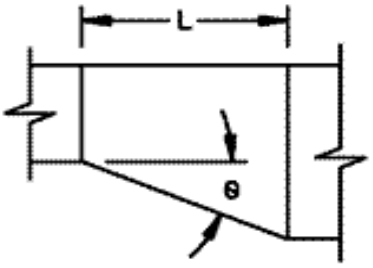

ECCENTRIC TRANSITION
θ MAX. 30°
(EXCEPT 45° IS PERMITTED
AT ROUND TO FLAT OVAL)

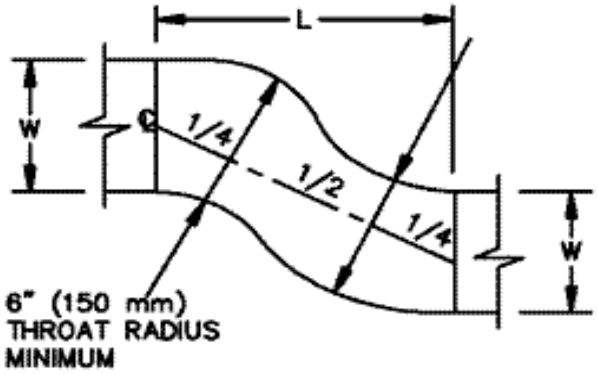

OFFSET TYPE 3
(RADIUSSED
OR OGEE)

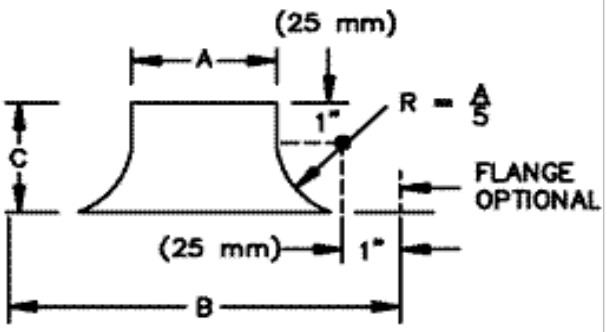

STANDARD BELLMOUTH
(ON SHORT PATTERN BELL
C = 3" (76 mm)
B = A + 4" (102 mm))

Environmental Air, Inc. - Shop Standards	
Date:	
Project:	

OFFSETS & TRANSITIONS

Self-Flashing Curb
Custom Sized
Type SFC

ACME MANUFACTURING CORP
6532 TOWER LANE, CLAREMORE, OK. 74019

ENGINEERED PRODUCTS BY CRAFTSMEN

STANDARD FEATURES

Constructed of 18 ga. galv. steel with continuous welded seams and integral base plate for water tightness and extra strength.

Wide base flashing to insure adequate bond to roofing surface for water tight seal to roof.

Lined with 1½" fiberglass fire proof sound attenuating insulation.

Top of curb covered with ¼" polystyrene gasket for weather seal and to reduce metal to metal conducted noise.

Custom sizes to meet any dimensional requirement or roof opening.

OPTIONS

- Constructed of .063" aluminum.
- Interior metal liner.
- Standard heights of 12, 14, 16, 18, 20, 24", or any special height.
- Damper shelf – standard or custom size opening.
- Wide flange (6" or 8" wide).
- Back draft damper.
- Damper motor, 120, 240, or 480 vac.
- Protective or decorative coatings.
- Heavy-gage construction.

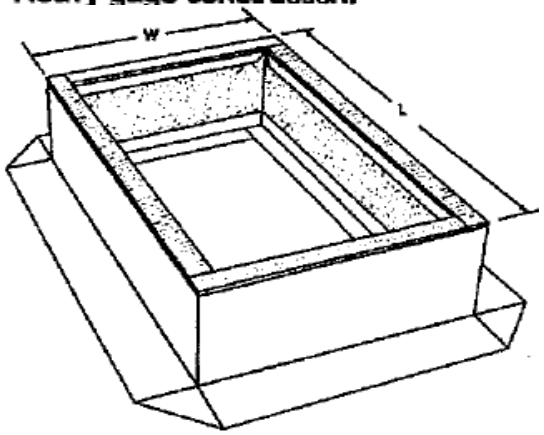

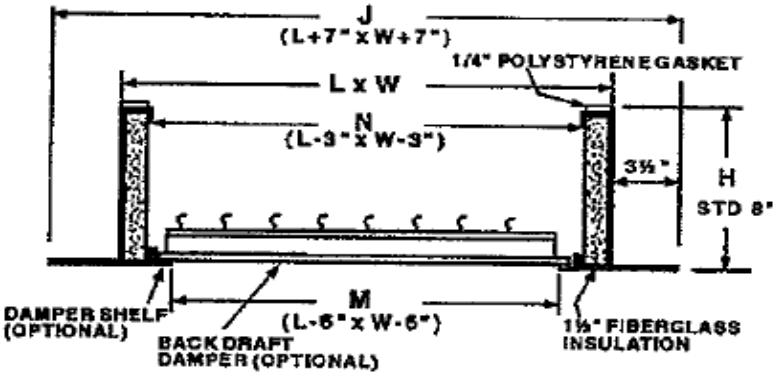

Qty	Material	L	W	M	H	Options
	Galvanized					

Environmental Air, Inc. - Shop Standards	
Date:	
Project:	

ROOF CURB

Self Flashing Custom Size

NOTE: STANDARD LUMBER OVERHANG 1/2" UNLESS SPECIFIED OTHERWISE

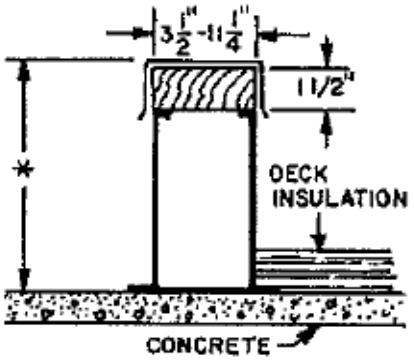

ER-2A STYLE

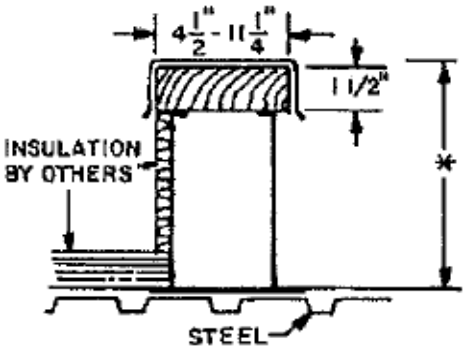

ER-2B STYLE

* NOTE: STANDARD OVERALL HEIGHT 11" UNLESS SPECIFICALLY SHOWN BELOW

ER-2A & ER-2B Styles

STANDARD CONSTRUCTION

- 18 GAUGE GALVANIZED STEEL
- GALVANIZED CAP FLASHING
- WOOD NAILER
  - "A" STYLE FLUSH
  - "B" STYLE _____ OVERHANG
- UNITIZED CONSTRUCTION
- INTERNAL REINFORCEMENT
- CONTINUOUS WELDED CORNER SEAMS

PROJECT REQUIREMENTS:

Quantity	
Style	2A
Length	3 feet
Width	4 inches
Overall Height	12 inches
"B" Style Nailer Overhang	N/A
Pitch - Long Side	N/A
Pitch - Short Side	N/A
Tag	Rails

Environmental Air, Inc. - Shop Standards	
Date:	
Project:	

EQUIPMENT RAILS

For pipe penetrations from 3/8" to 12"

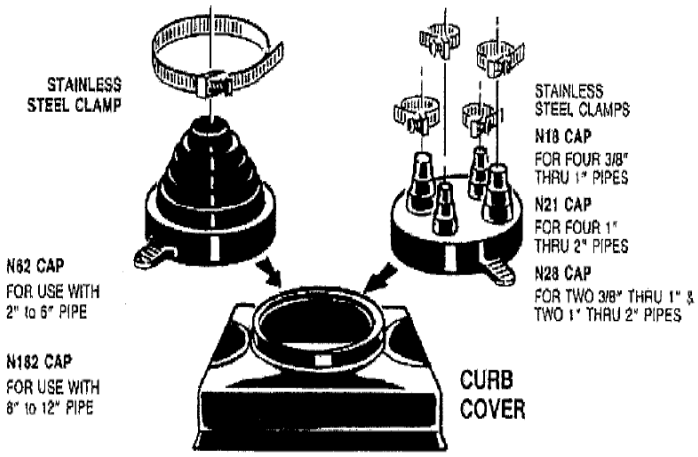

PIPE LAYOUT REFERENCE CHART

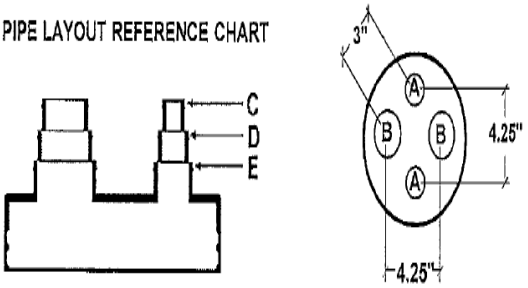

CAP MODEL	A			B		
	C	D	E	C	D	E
N28	.375"	.75"	1"	1"	1.5"	2"
N21	1"	1.5"	2"	1"	1.5"	2"
N18	.375"	.75"	1"	.375"	.75"	1"

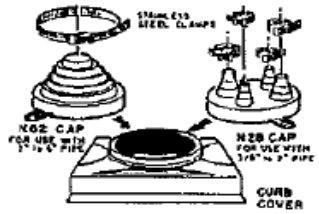

N62- For one- 2" to 6" pipe . . . 13" x 13" I.D. reinforced ABS plastic cover . . . single nippled EPDM rubber cap . . . one large adjustable stainless steel clamp
N18- For four- 3" to 1" pipes . . .
N21- For four- 1" to 2" pipes . . .
N28- For two- 3/8" to 1" and two- 1" to 2" pipes . . . 13" x 13" I.D. reinforced ABS plastic cover . . . four nippled EPDM rubber cap . . . two pairs adjustable stainless steel clamps

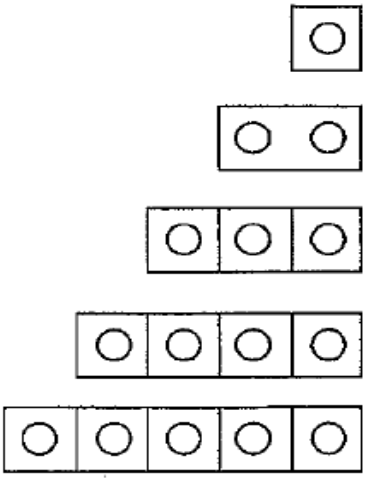

1 Opening
O.D. = 12" x 12"

2 Openings
O.D. = 12" x 27-1/2"

3 Openings
O.D. = 12" x 43"

4 Openings
O.D. = 12" x 58-1/2"

5 Openings
O.D. = 12" x 74"

CURB QTY.	PIPE PORTAL STYLE	PIPE PORTAL QTY.
	N62	
	N18	
	N21	
	N28	
	N62	
	N18	
	N21	
	N28	
	N62	
	N18	
	N21	
	N28	
	N62	
	N18	
	N21	
	N28	
	N62	
	N18	
	N21	
	N28	

PROJECT REQUIREMENTS

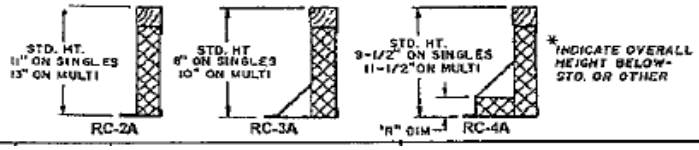

STANDARD CONSTRUCTION

- STANDARD RPS ROOF CURB
- 18 GAUGE GALVANIZED STEEL
- 1-1/2", 3LB. DENSITY FIBERGLASS INSULATION
- WOOD NAILER
- MOLDED ABS PLASTIC COVER
- MOLDED EPDM RUBBER CAP(S)
- STAINLESS STEEL CLAMP(S)

Project Requirements:

Curb Style:

Pipe Portals:

Environmental Air, Inc. - Shop Standards	
Date:	
Project:	

PIPE PORTALS

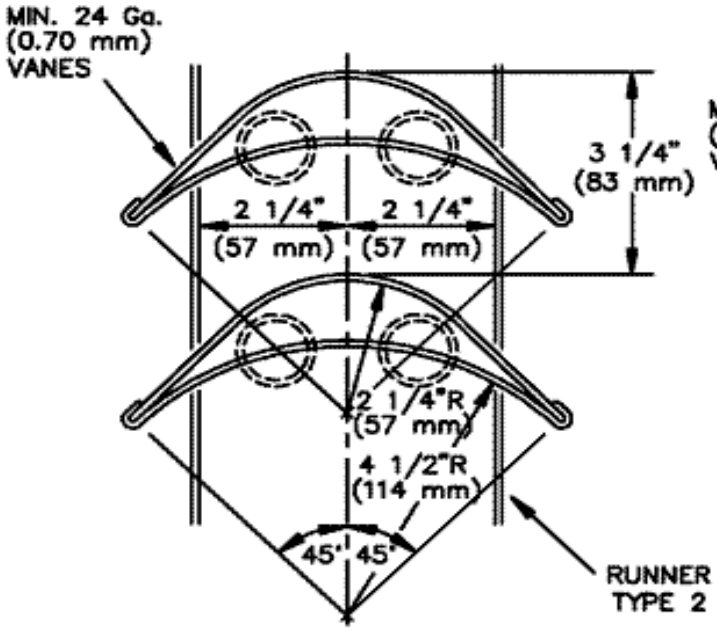

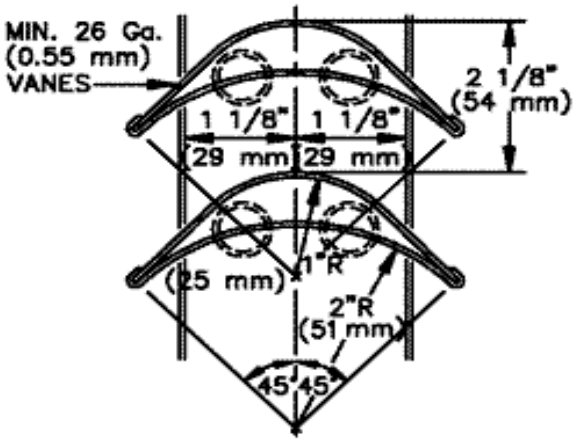

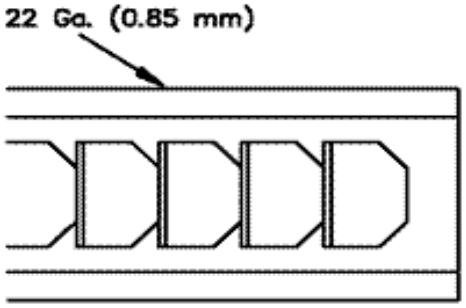

RUNNER TYPE 1

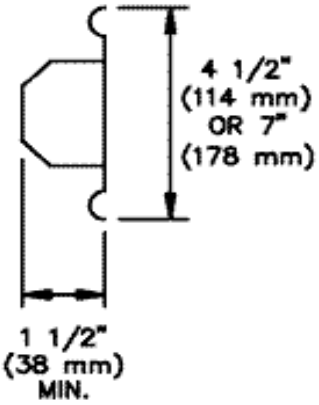

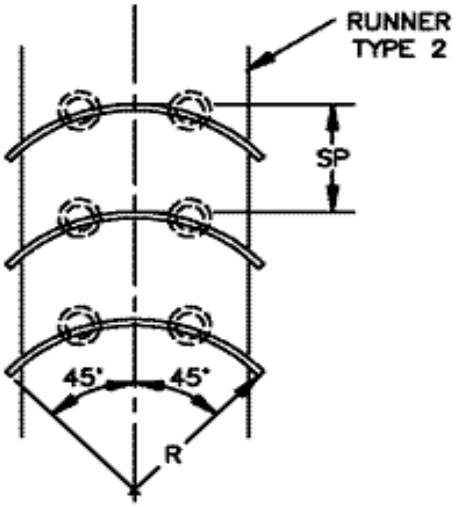

FREE AREA BETWEEN DOUBLE WALL VANES APPROXIMATES ELBOW INLET AREA.

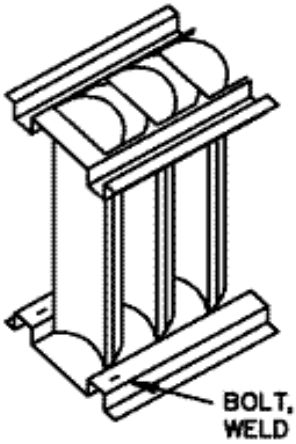

BOLT, SCREW OR WELD RUNNER TO DUCT

SINGLE VANE SCHEDULE			
	R	SP	GA
SMALL	2" (51 mm)	1 1/2" (38 mm)	24 (0.70 mm)
LARGE	4 1/2" (114 mm)	3 1/4" (83 mm)	22 (0.85 mm)

SEE NOTES ON FIG. 2–4. OTHER RUNNERS MAY BE USED AS APPROPRIATE. OTHER VANE SIZES, SPACINGS OR CONFIGURATIONS ARE ACCEPTABLE ON DESIGNER APPROVAL.

Environmental Air, Inc. - Shop Standards	
Date:	
Project:	

VANE & VANE RUNNERS

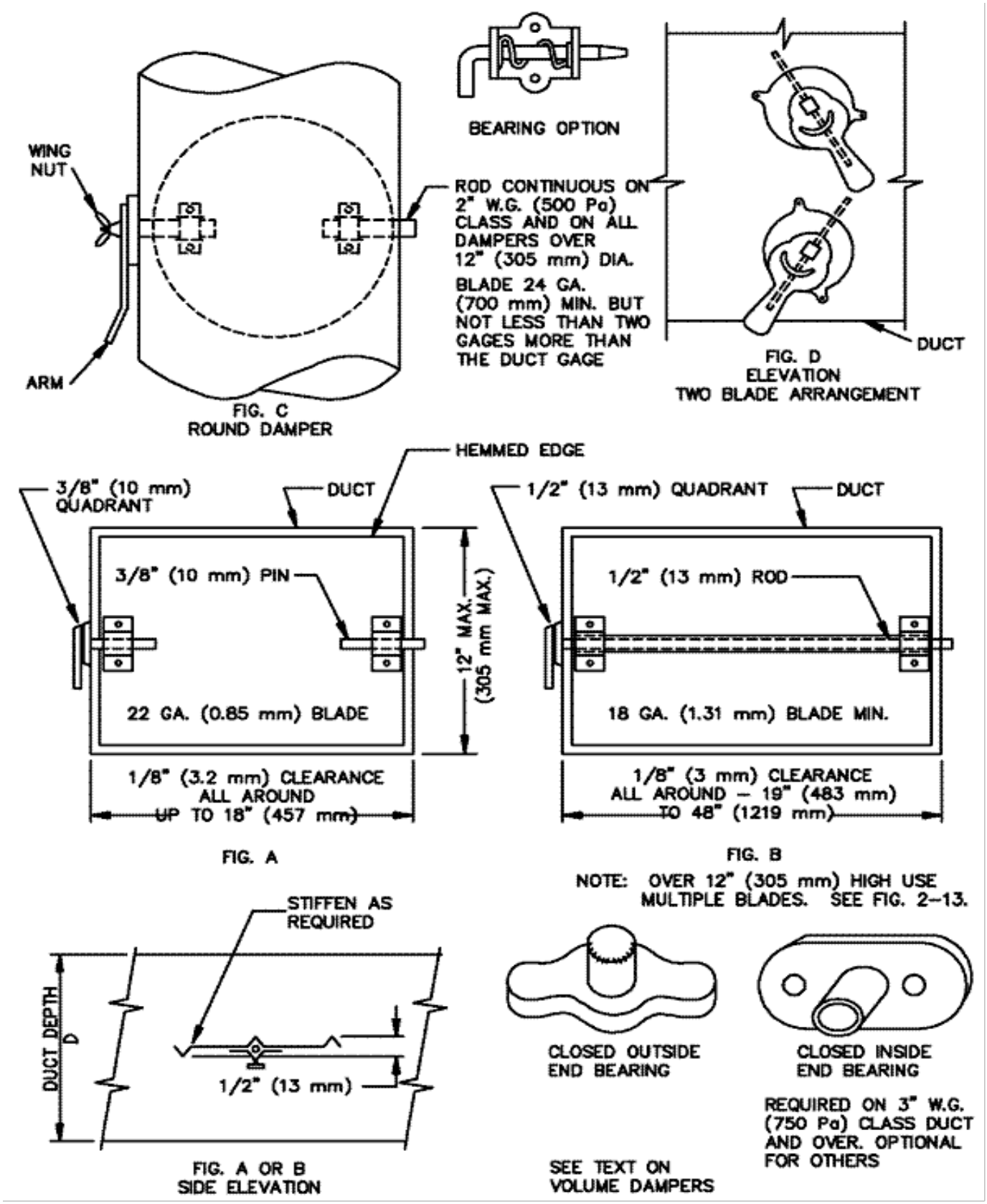

Environmental Air, Inc. - Shop Standards	
Date:	
Project:	

VOLUME DAMPERS

Single Blade

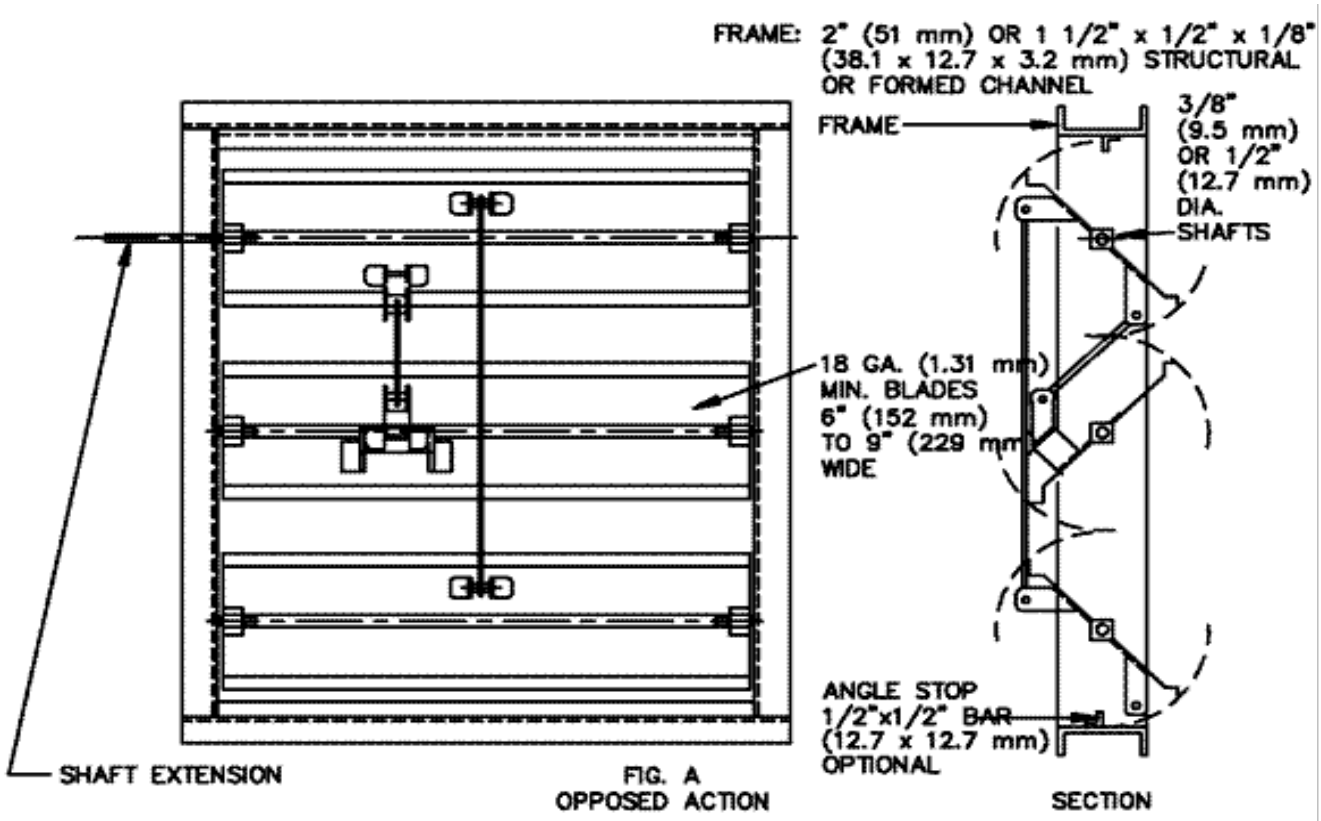

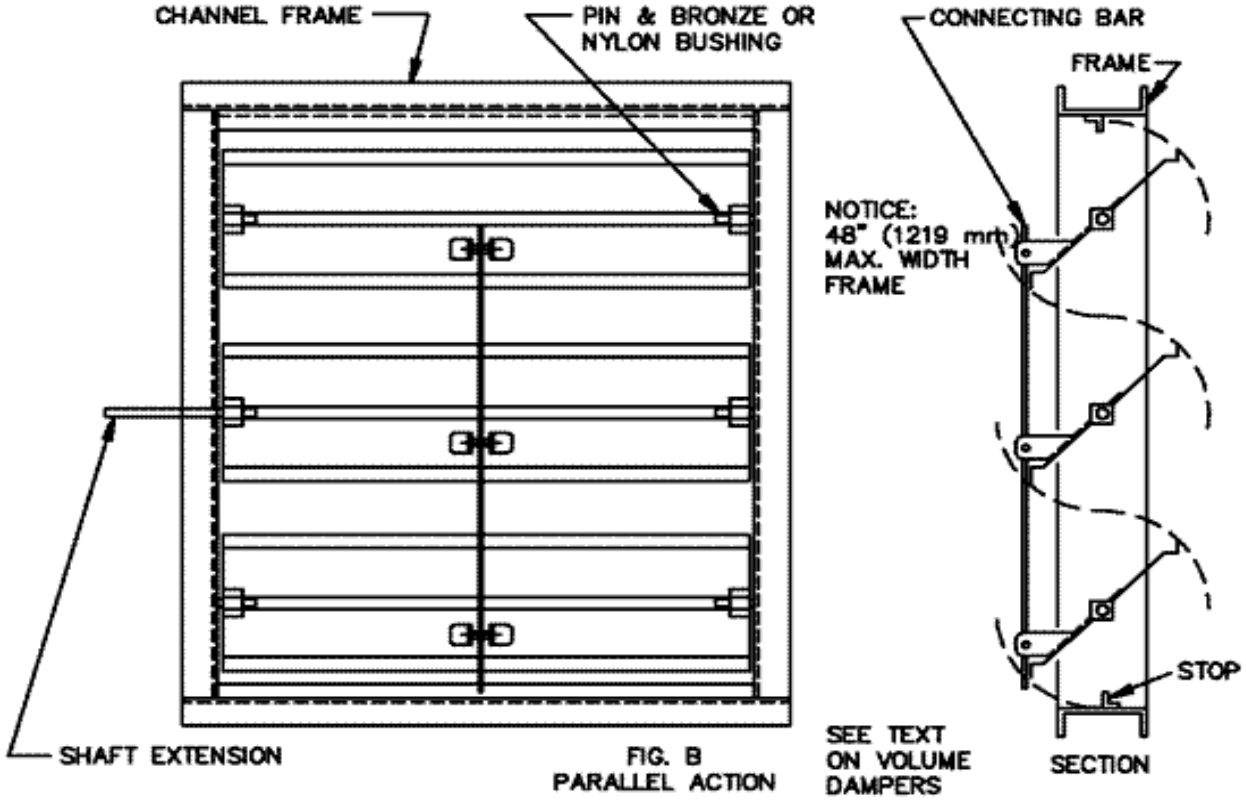

Environmental Air, Inc. - Shop Standards	
Date:	
Project:	

VOLUME DAMPERS

Multiple Blade